This Manual Must Be Read Before Operating The Equipment

Owner / Operator's Manual

SnowEx®

Equipment for Snow & Ice Control

V-MAXX SPREADERS

SP-2400 H
SP-8500 H
SP-9500 H

TrynEx® INTERNATIONAL
Madison Heights, Michigan 48071
800-725-8377

CUSTOMER COPY

Protected by the following patents, #6,089,478, #6,088,865, #Des.425,915 and other pending U.S. and foreign patent applications.

© Trynex International 2008 L1215

Rev. 01

Table of Contents

Introduction 3
General Information and Registration 4
Safety Information ..... 5 - 7
Spreader Assembly and Exploded Views ..... 8 - 29
Electrical System Information ..... 30 - 36
Hydraulic Hose Routing ..... 37 - 38
Spreader Mounting System ..... 39 - 43
Spreader Operating Information ..... 44 - 46
Troubleshooting Information ..... 47 - 48
Spreader Maintenance 49
Determine Vehicle Payload Chart 50
Hydraulic System Specifications 51
Blank Pages ..... 52 - 53
Warranty ..... 54 - 55

Have a question or need assistance?

SnowEx Customer Service

(800) 725-8377

or (248) 586-3500

Monday through Friday 8:00 AM to 4:30 PM EST

Fax: (248) 691-8378

E-Mail: customercare@trynexfactory.com

Website: www.snowexproducts.com

© Trynex International 2008 L1215

This manual has been designed for your help. It will assist you and instruct you on the proper set-up, installation and use of this spreader. Refer to the table of contents for an outline of this manual.

We require that you read and understand the contents of this manual completely (especially all safety information) attempting any procedure contained herein.

THIS SIGN SHOULD ALERT YOU:
The Society of Automotive Engineers has adopted this SAFETY ALERT SYMBOL to pinpoint characteristics that, if NOT carefully followed, can create a safety hazard. When you see this symbol in this manual or on the machine itself, BE ALERT! Your personal safety and the safety of others is involved.

Defined below are the SAFETY ALERT messages and how they will appear in this manual:

DANGER

(RED)
Information that, if not carefully followed,
can cause death!

WARNING

(ORANGE)
Information that, if not carefully followed,
can cause serious personal injury or death!

CAUTION

(YELLOW)
Information that, if not carefully followed,
can cause minor injury or damage to equipment.

General Information

CONGRATULATIONS!

The spreader you have purchased is an example of snow and ice control technology at its finest! Your spreader's innovative, self-contained design is a trademark of all Trynex products. Here's why...

SIMPLICITY: Fewer moving parts manufactured of higher quality means minimal maintenance for your SnowEx spreader.

RELIABILITY: High impact linear low density polyethelyne hopper, heavy duty hydraulic motors, custom engineered powder coated frame, found only on SnowEx products.

VERSATILITY: Multi-use capabilities allows spreading of a variety of materials for snow and ice control.

WARRANTY: Best in the industry, hands down! 2 Years Standard.

The benefits you are about to recognize are that of time, money and effort.
We welcome you to the world of Trynex Performance.

Registration

Record the following information in this manual for quick reference.

Spreader Model Number _____

Spreader Serial Number_____ Controller Serial Number _____

Date of Purchase_____

Dealer Where Purchased _____

When ordering parts, the above information is necessary. This will help to insure that you receive the correct parts.

At the right is a diagram of the ID tag. This tag on the spreader is located on the frame.

SER. NO._____
TRYNEX INTERNATIONAL
Warren, MI 48089 (800) 725-8377

Please fill out the warranty card with all the necessary information to validate it. This will also give us a record so that any safety or service information may be communicated to you.

© Trynex International 2008 L1215

DANGER **WARNING** **CAUTION**

Before attempting any procedure in this book, these safety instructions must be read and understood by all workers who have any part in the preparation or use of this equipment.

For your safety warning and information decals have been placed on this product to remind the operator of safety precautions. If anything happens to mark or destroy the decals, please request new ones from Trynex, International.

WARNING Unit must be strapped down and locked into position before operating vehicle.

DANGER Never exceed the Gross Vehicle Weight Rating of vehicle. Failure to do so may limit a vehicles handling characteristics.

DANGER Never attempt to take a unit off a truck with material in it.

WARNING Never exceed 45 m.p.h. when loaded spreader is attached to vehicle. Braking distances may be increased and handling characteristics may be impaired at speeds above 45 m.p.h.

WARNING Never allow children to operate or climb on equipment.
Always check areas to be spread to be sure no hazardous conditions or substances are in the area.
Always inspect unit for defects: broken, worn or bent parts, weakened areas on spreader or mount.

WARNING Always shut off vehicle and power source before attempting to attach or detach or service spreader unit. Be sure vehicle/power source is properly braked or chocked.

WARNING Always keep hands, feet, and clothing away from power-driven parts. Remember it is the owner's responsibility to communicate information on safe usage and proper maintenance of all equipment.

WARNING Always make sure personnel are clear of areas of danger when using equipment. Maintain 60' distance from all bystanders when operating the spreader.

WARNING Inspect the unit periodically for defects. Parts that are broken, missing, or worn out must be replaced immediately. The unit, or any part of it should be altered without prior written permission from the manufacturer.

CAUTION Never use V-Maxx 8500 with foreign debris in the spreader. These units are designed to handle clean, free-flowing material. Note: Can not spread water softner salt.

WARNING Always inspect pins and latches whenever attaching or detaching spreader, and before traveling.

CAUTION Never leave material in hopper for long periods of time. Be aware that all ice melters are hygroscopic and will attract atmospheric moisture and harden up.

WARNING Remember, most accidents are preventable and caused by human error. Exercising of care and precautions must be observed to prevent the possibility of injury to operator or others!

WARNING Never operate equipment when under the influence of alcohol, drugs, or medication that might alter your judgment and/or reaction time.

WARNING Before working with the spreader, secure all loose fitting clothing and unrestrained hair.

WARNING Always wear safety glasses with side shields when servicing spreader. Failure to do this could result in serious injury to the eyes.

CAUTION CHMSL light must be installed and plugged in to meet DOT FMVSS-108 standards.

WARNING Always disconnect the spreader hydraulic hoses from there power source before servicing the unit. Failure to do so could result in serious injury.

CAUTION Make sure hydraulic couplers are fully connected, failure to do so will result in motor failure.

© Trynex International 2008 L1215

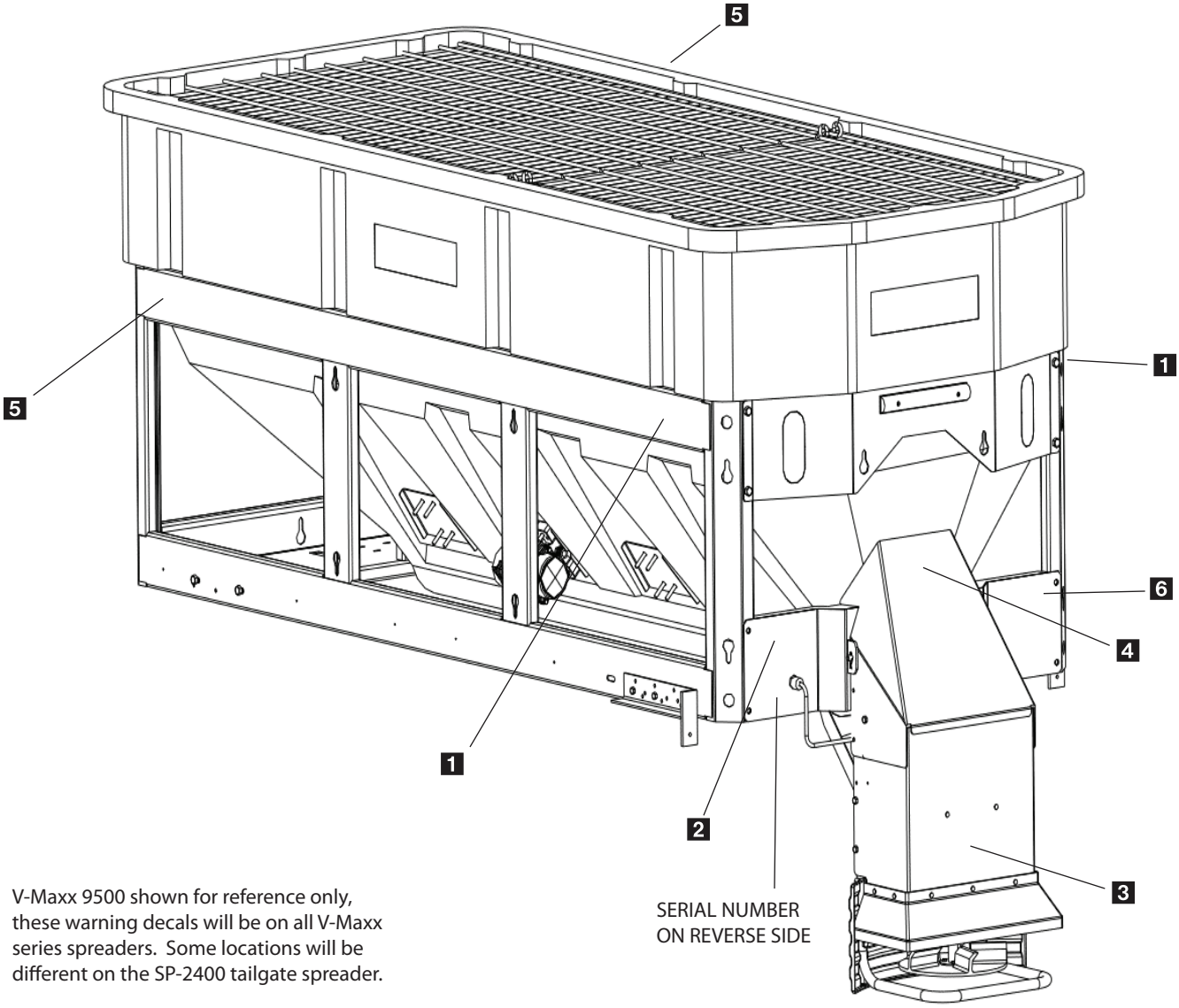

V-Maxx 9500 shown for reference only, these warning decals will be on all V-Maxx series spreaders. Some locations will be different on the SP-2400 tailgate spreader.

1 D 6546

2 D 6859

3 D 6545

4 D 6544

5 D 6335

6 D 6548

V-Maxx 8500H/9500H Auger Drive Assembly

Parts Breakdown

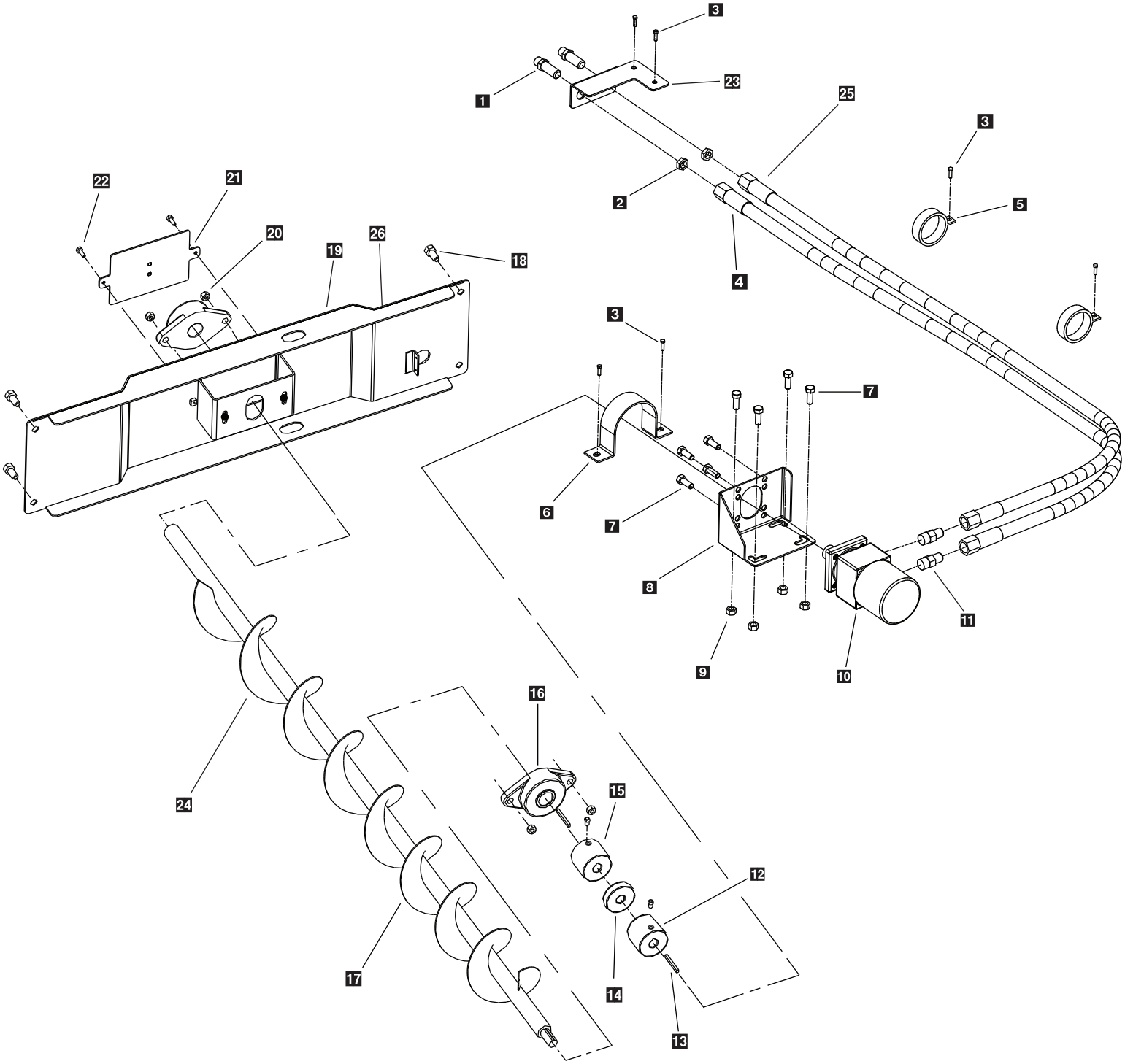

© Trynex International 2008 L1215

V-Maxx 8500H/9500H Auger Drive Assembly

Parts Breakdown

Key	Part No.	Description	Qty.
1	D 5768	Hydraulic Bulkhead Fitting	2
2	D 5769	Bulkhead Fitting Jam Nut	2
3	D 6874	1/4" x 1.5 SS Self Drilling Screw	6
4	D 5764	SP-8500 64" Hydraulic Hose	2
5	D 5770	Hose Clamp	2
6	D 5787	Motor Coupling Shield	1
7	D 6452	3/8"-16 x 1" Serrated Flange	8
8	D 5761	Hydraulic Motor Mount	4
9	D 6584	3/8" Serrated Flange Nut	4
10	D 5760	Hydraulic Auger Motor	1
11	D 5767	Hydraulic Motor Hose Coupling	2
12	D 5758	Auger Motor Coupler	1
13	D6873	3/16" Key Stock	2
14	D 5776	Hytrel Spyder	1
15	D6842	Auger Coupler	1
16	D 6845	Auger Bearing	2
17	D 6816	SP-8500 Auger Weldment	1
18	D 6528	1/2"-13 Serrated Hex Head	4
19	D 6803	SP-8500 Rear Rail Assembly	1
20	D 5535	1/2-13 Serrated Flange Nut	2
21	D 6814	Bearing Cover	1
22	D 6132	1/4"-20 x 3/4" Hex	2
23	D 5759	Hose Fitting Mounting Bracket	1
24	D 6897	SP-9500 80" Auger Weldment	1
25	D 5779	SP-9500 96" Hydraulic Hose	2
26	D 6881	SP-9500 Rear Rail Assembly	1

V-Maxx 2400H Auger Drive Assembly

Parts Breakdown

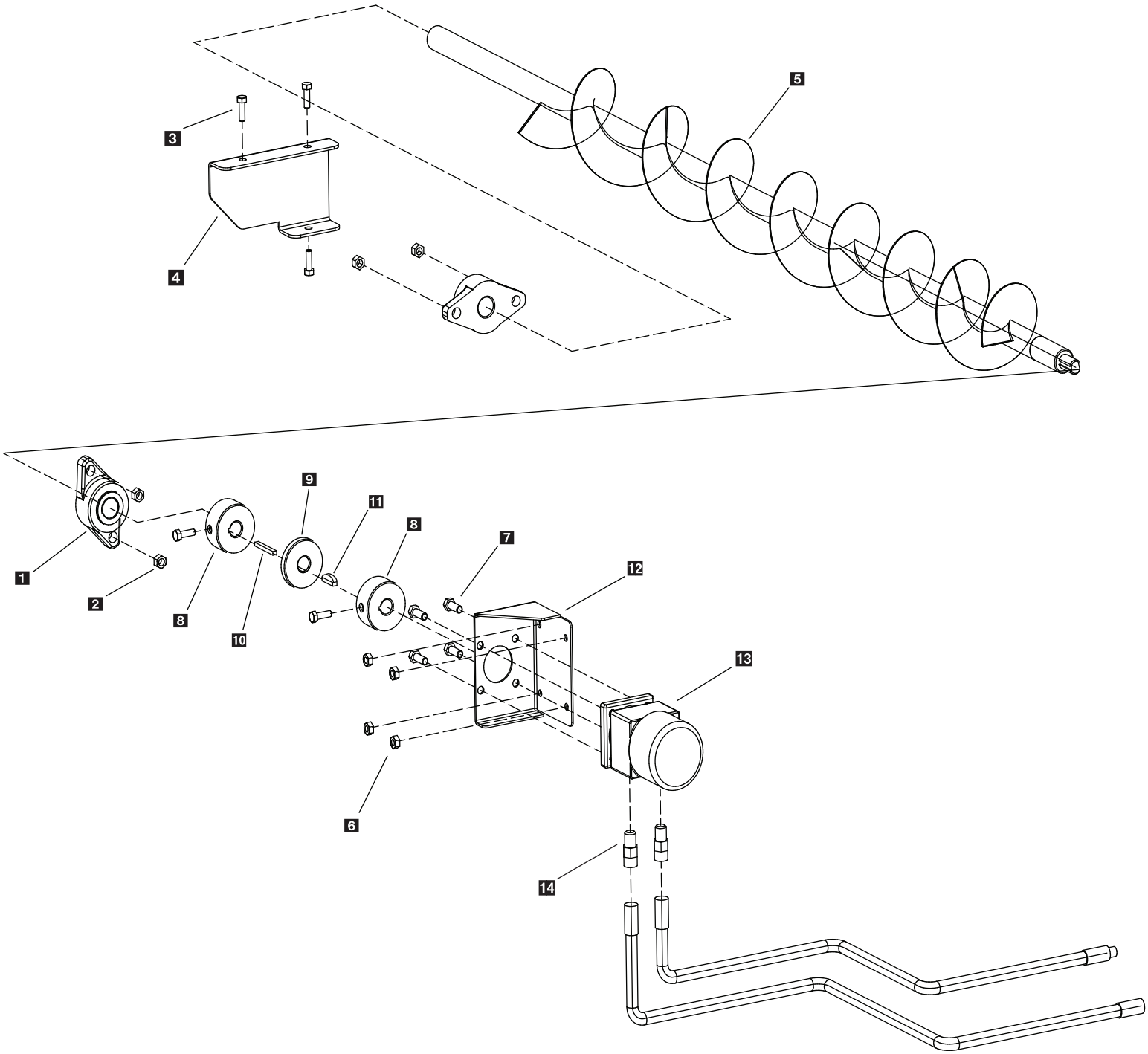

NOTE: Hoses are shown for reference only
and are not included with the system.

© Trynex International 2008 L1215

V-Maxx 2400H Auger Drive Assembly

Parts Breakdown

Key	Part No.	Description	Qty.
1	D 5527	1" Bearing	2
2	D 6584	3/8" Flange Nut	4
3	D 6453	5/16" x 1" Serrated 18-8 SS	3
4	D 5702	Bearing Cover	1
5	D 5783	6" Auger Weldment	1
6	D 5706	5/16" Serrated Flange Nut	4
7	D 6452	3/8" Serrated HHCS	4
8	D 5775	Motor Coupler	2
9	D 5776	Urethane Spyder	1
10	D 5749	1/4" Key Stock	1
11	D 6825	Woodruff Key	1
12	D 5754	Auger Motor Mounting Bracket	1
13	D 5760	Hydraulic Auger Motor	1
14	D 5767	Hydraulic Hose Coupler	2

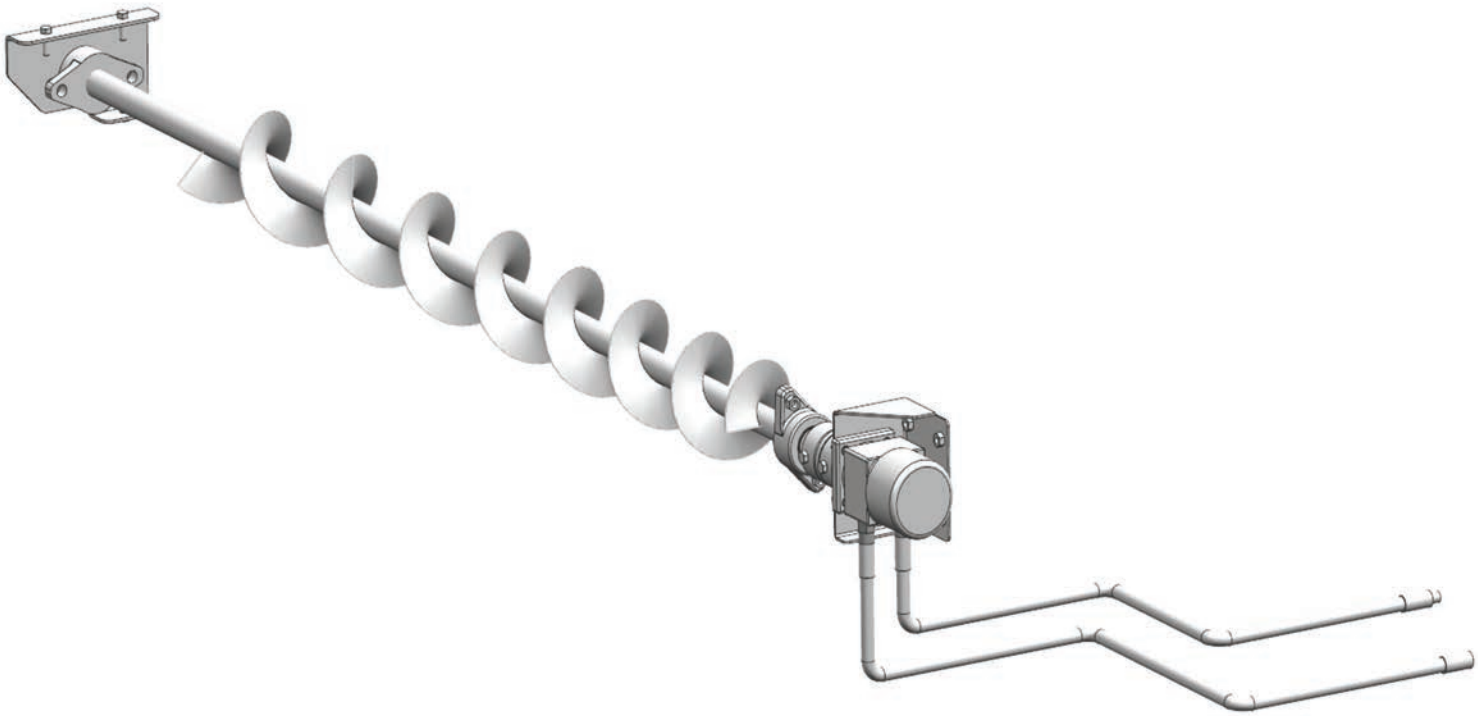

V-Maxx 8500H Spinner Drive Assembly

Parts Breakdown

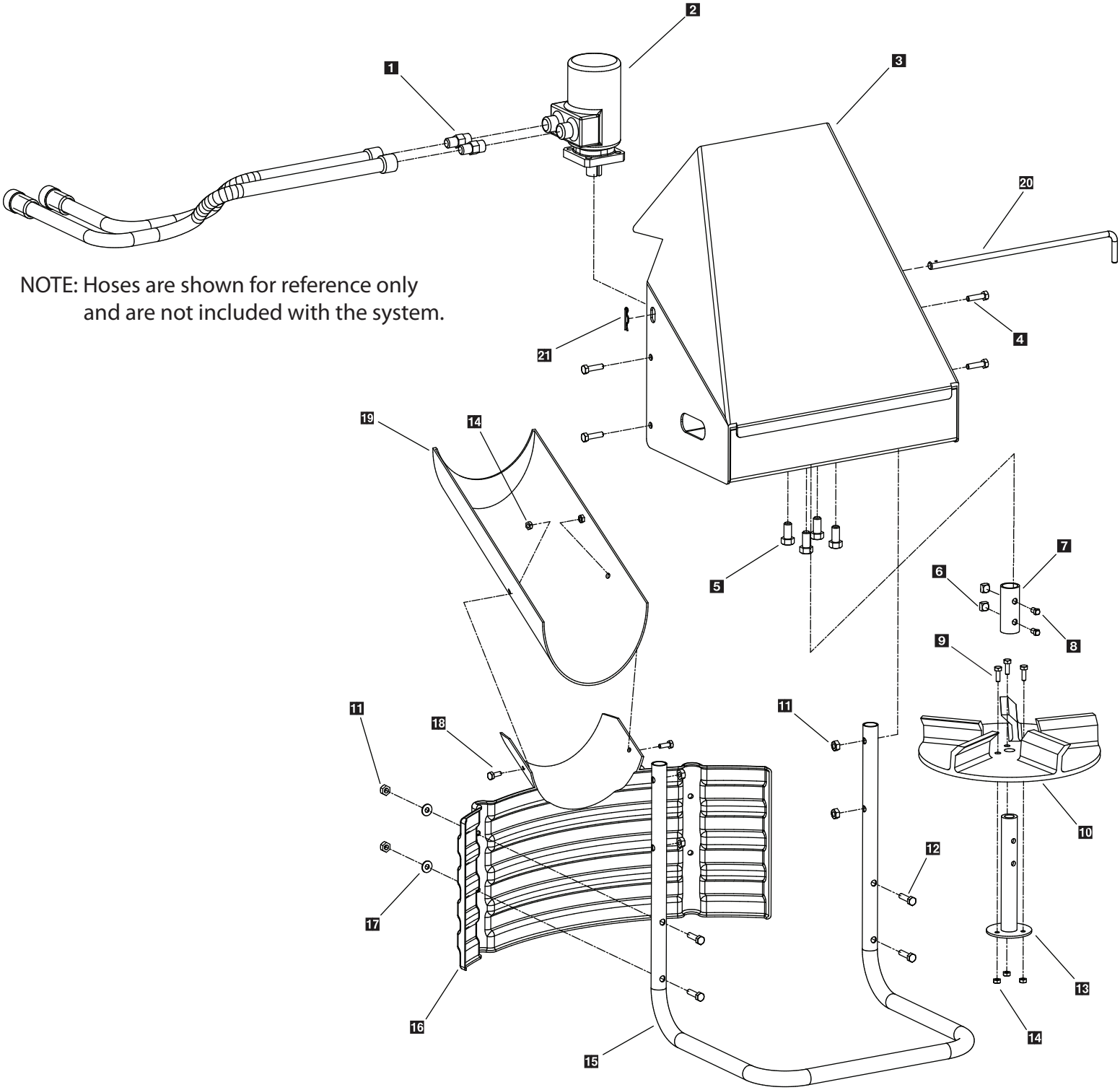

NOTE: Hoses are shown for reference only
and are not included with the system.

Rev. 01

L1215 © Trynex International 2008

V-Maxx 8500H Spinner Drive Assembly

Parts Breakdown

Key	Part No.	Description	Qty.
1	D 5767	Hydraulic Hose Coupler	2
2	D 5755	Hydraulic Spinner Motor	1
3	D 5764	Drive Enclosure Shroud	1
4	D 6462	5/16-18 x 1-3/4" Bolt	4
5	D 6452	3/8-16 x 1" Serrated Hex Head Bolt	4
6	D 4124	3/8 Nylock Nut	2
7	D 5784	Hydraulic Motor To Spinner Coupler	1
8	D 6160	3/8 - 16 x 2" Hex Head Bolt	2
9	D 6854	1/4 - 20 x 1" Serrated HWH SS	3
10	D 6823	5 Flite Urethane Spinner	1
11	D 6138	5/16 Nylock Nut	8
12	D 6462	5/16-18 x 1-3/4" Hex Head Bolt	4
13	D 5762	Spinner Hub Weldment	1
14	D 4289	1/4-20 Nylock Nut	5
15	D 6820	Heavy Duty Tubular Guard	1
16	D 6833	Material Deflector	1
17	D 6165	5/16 Flat Washer	4
18	D 6132	1/4-20 x 1/2" SS HWH Serrated TCS	2
19	D 6832	Material Chute	1
20	D 6563	20" Drive Mounting Pin	2
21	D 4135	Drive Mounting Pin Clip	1

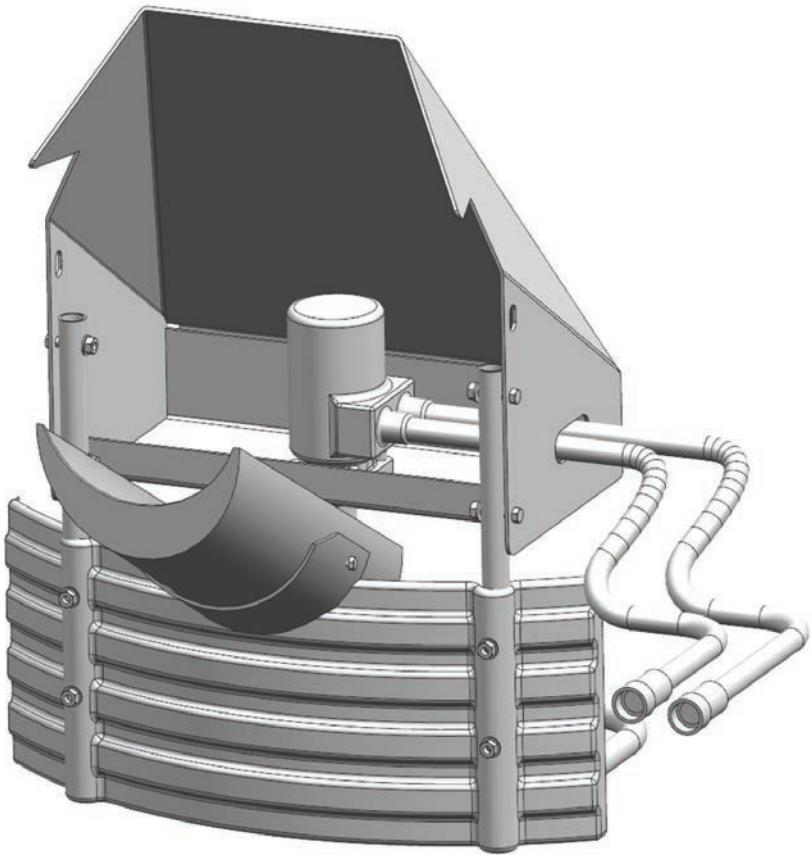

© Trynex International 2008 L1215

V-Maxx 9500H Spinner Drive Assembly

Parts Breakdown

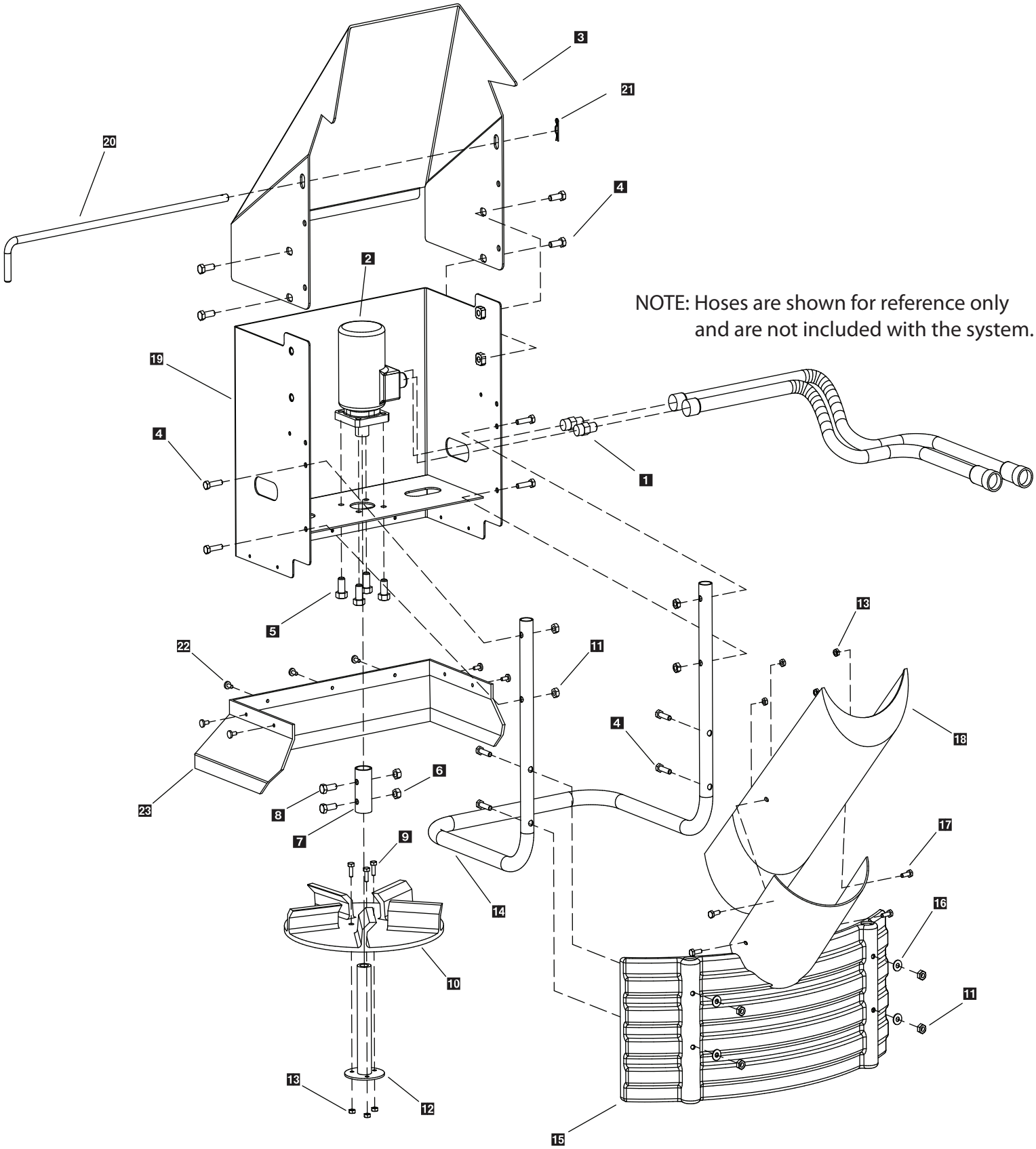

L1215 © Trynex International 2008

V-Maxx 9500H Spinner Drive Assembly

Parts Breakdown

Key	Part No.	Description	Qty.
1	D 5767	Hydraulic Hose Coupler	2
2	D 5755	Hydraulic Spinner Motor	1
3	D 5764	Drive Enclosure Shroud	1
4	D 6462	5/16-18 x 1-3/4" Hex Head Bolt	8
5	D 6452	3/8-16 x 1" Serrated Hex Head Bolt	4
6	D 4124	3/8 Nylock Nut	2
7	D 5784	Hydraulic Motor To Spinner Coupler	1
8	D 6160	3/8 - 16 x 2" Hex Head Bolt	2
9	D 6854	1/4 - 20 x 1" Serrated HWH SS	3
10	D 6823	5 Flite Urethane Spinner	1
11	D 6138	5/16 Nylock Nut	8
12	D 5762	Spinner Hub Weldment	1
13	D 4289	1/4-20 Nylock Nut	7
14	D 6820	Heavy Duty Tubular Guard	1
15	D 6858	Material Deflector	1
16	D 6165	5/16 Flat Washer	1
17	D 6132	1/4-20 x 1/2" SS HWH Serrated TCS	4
18	D 6885	Material Chute	1
19	D 5777	10" Drop Extension	1
20	D 6563	20" Drive Mounting Pin	1
21	D 4135	Drive Pin Mounting Clip	1
22	D 6463	Plastic Push Pin	7
23	D 6859	Drive Extension Spinner Shield	1

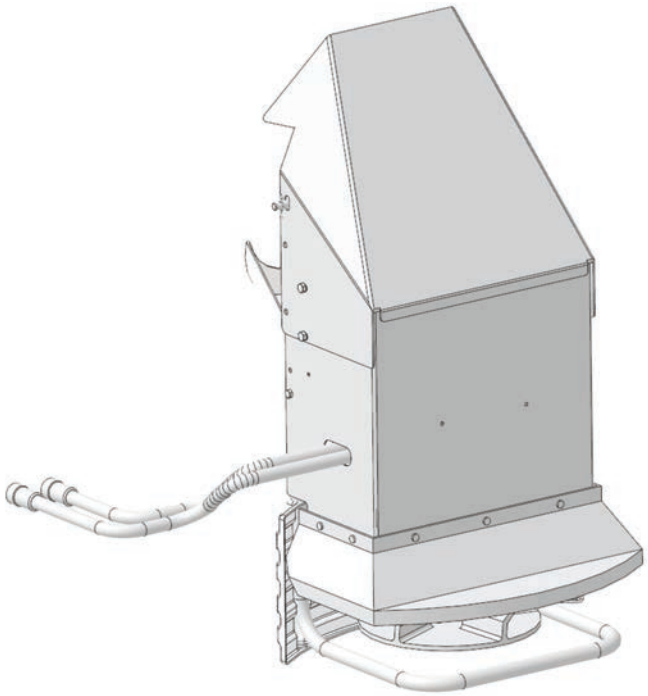

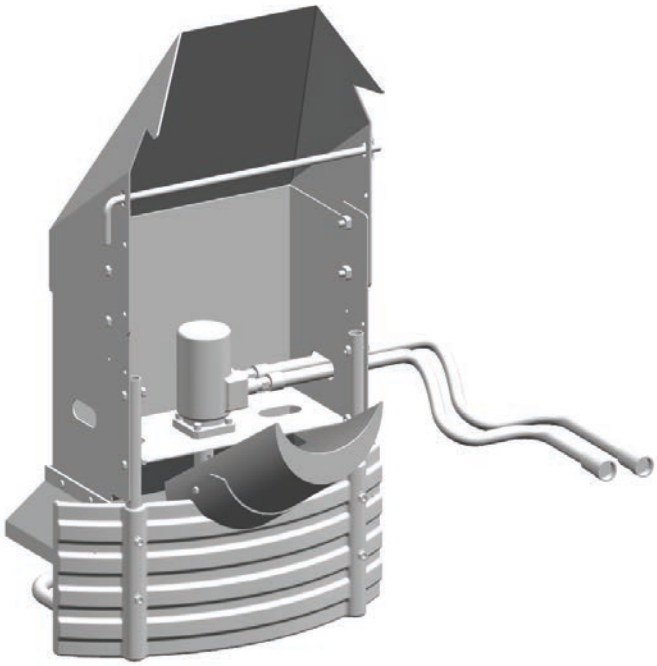

V-Maxx 2400H Spinner Drive Assembly

Parts Breakdown

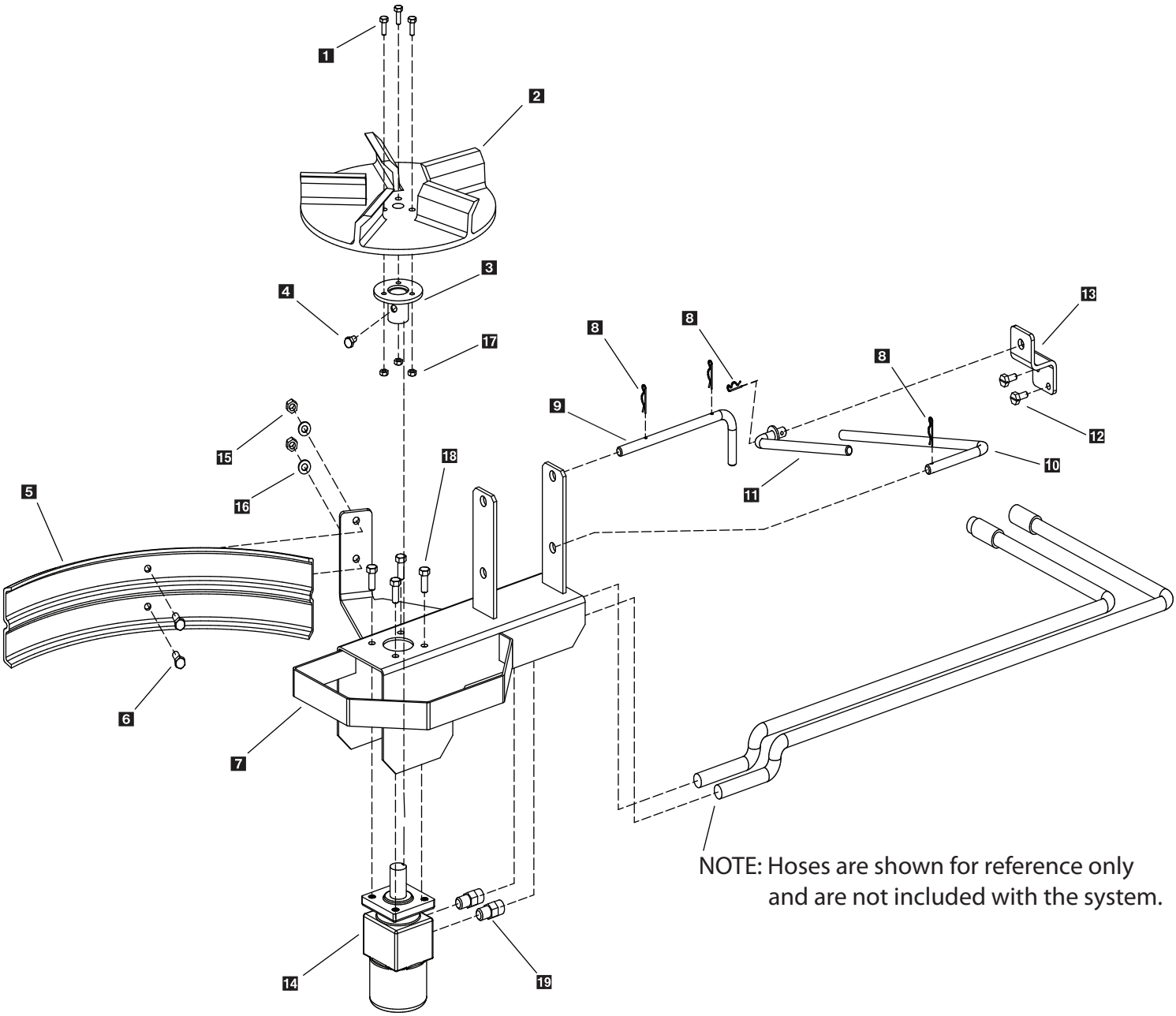

NOTE: Hoses are shown for reference only and are not included with the system.

L1215 © Trynex International 2008

V-Maxx 2400H Spinner Drive Assembly

Parts Breakdown

Key	Part No.	Description	Qty.
1	D 6854	1/4-20 x 1" HWH Serrated	3
2	D 6823	Urethane Spinner	1
3	D 5718	Spinner Hub Weldment	1
4	D 6133	5/16-18 x 1/2" Hex Bolt	1
5	D 6327	Spinner Deflector	1
6	D 4121	3/8-16 x 1" HHCS	2
7	D 5744	Spinner Motor Enclosure	1
8	D 4135	5/16 Hair Pin Clip	4
9	D 5739	Spinner Drive Pin	1
10	D 5741	Long Leveler Rod	1
11	D 5740	Short Leveler Rod	1
12	D 6447	5/16" x 1" Self Driller	2
13	D 5738	Leveler Mount Bracket	1
14	D 5755	Hydraulic Spinner Motor	1
15	D 4124	3/8-16 Nylock Nut	2
16	D 4125	3/8 Flat Washer	2
17	D 4289	1/4-20 Nylock Nut	3
18	D 5767	Hydraulic Hose Coupling	2
19	D 6452	3/8-16 x 1" Serrated Hex Head Bolt	4

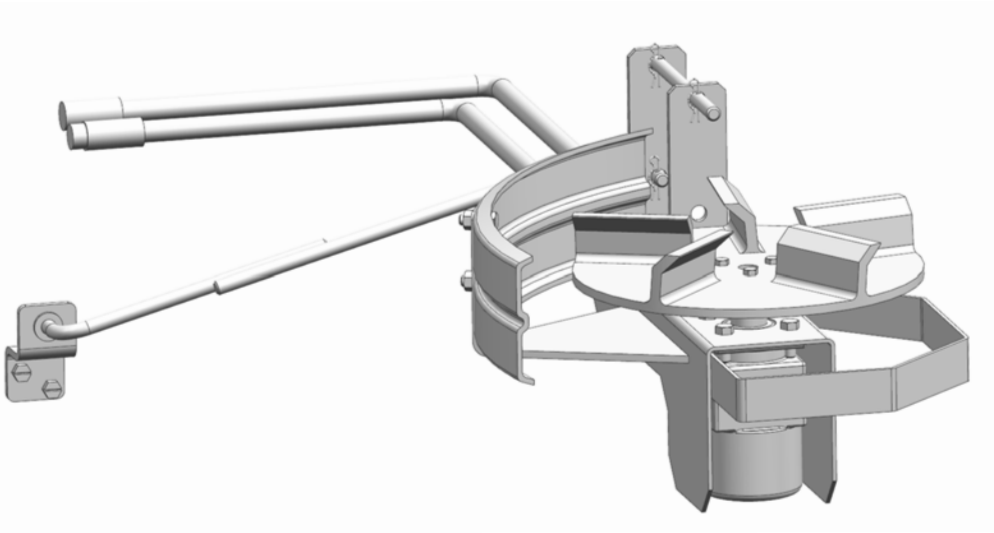

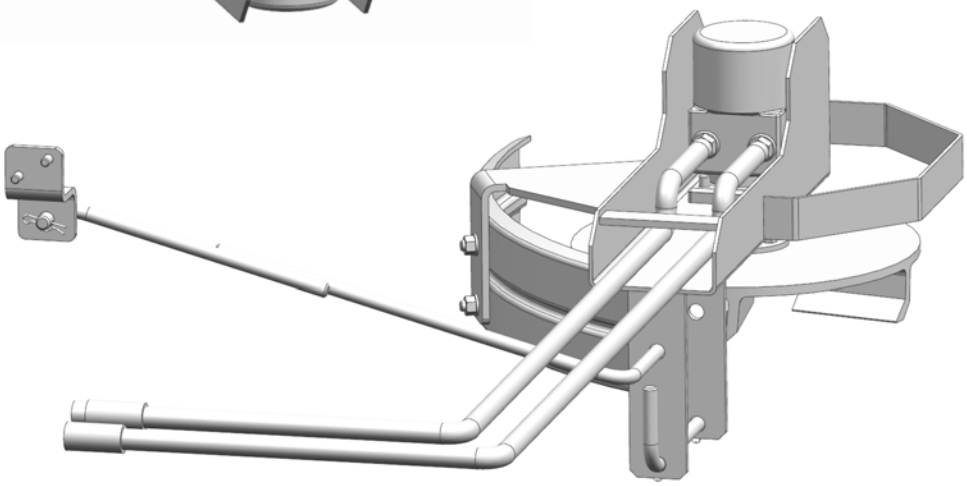

© Trynex International 2008 L1215

V-Maxx 8500H Hopper Assembly

Parts Breakdown

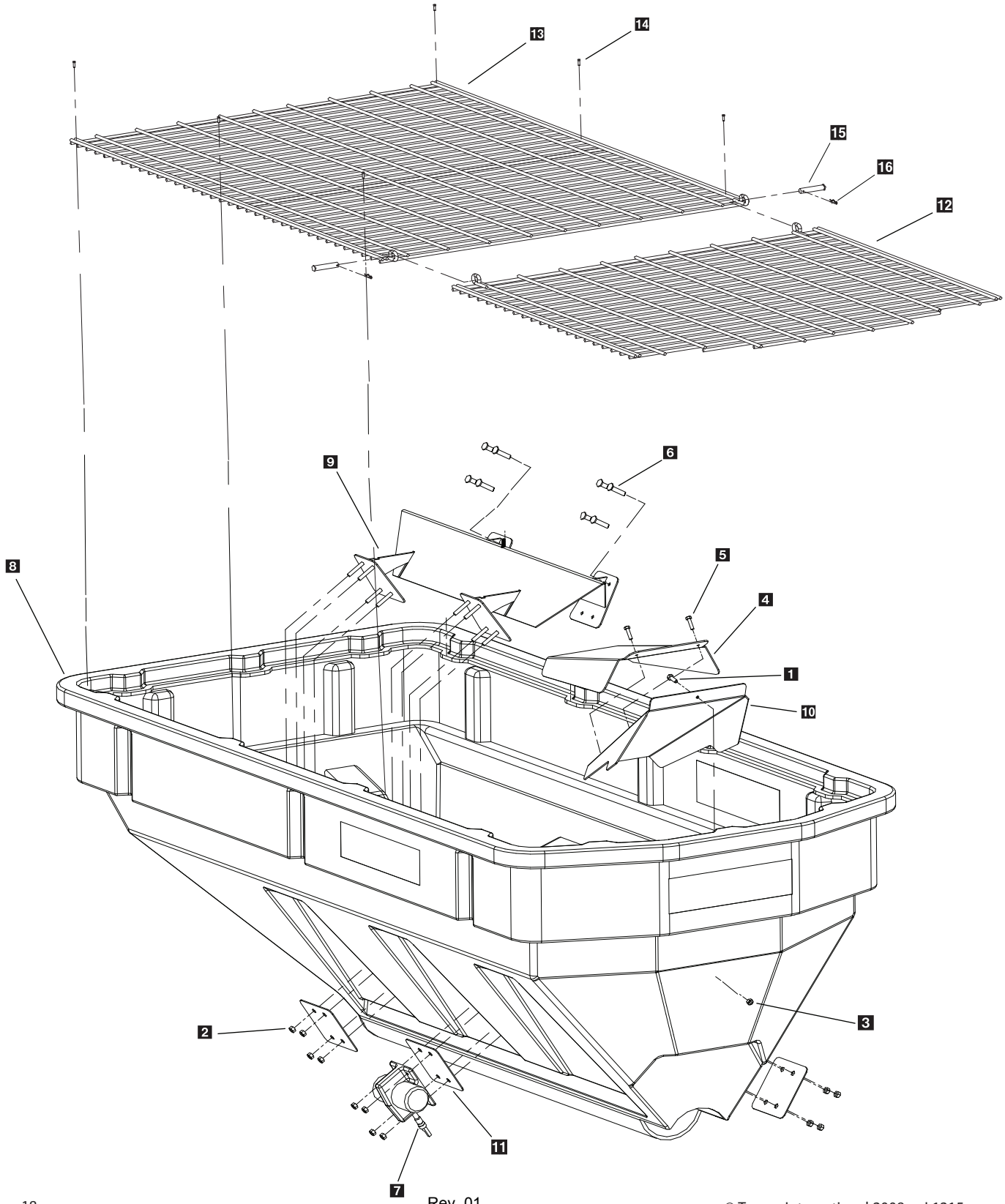

Rev. 01

© Trynex International 2008 L1215

V-Maxx 8500H Hopper Assembly

Parts Breakdown

Key	Part No.	Description	Qty.
1	D 6576	5/16-18 x 1-1/4 HHCS	1
2	D 6584	3/8 Serrated Flange Nut	17
3	D 6165	5/16" Flat Washer	1
4	D 6138	5/16" Nylock Nut	10
5	D 6874	#14 1-1/2" Tek w/Neo Washer	2
6	D 4122	3/8-16 x 1-1/2" Hex Head Bolt	8
7	D 6515	Heavy Duty Vibrator	1
8	D 6800	V-Maxx Hopper	1
9	D 6808	Inverted V Assembly	1
10	D 6807	Discharge Baffle	1
11	D 6811	Inverted V Backing Plates	4
12	D 6848	Front Top Screen	1
13	D 6849	Rear Top Screen	1
14	D 6874	#14 x 1.5" HWH Self Driller	6
15	D 6866	Top Screen Hinge Pin	2
16	D 4134	Top Screen Hinge Pin Clip	2

© Trynex International 2008 L1215

V-Maxx 9500H Hopper Assembly

Parts Breakdown

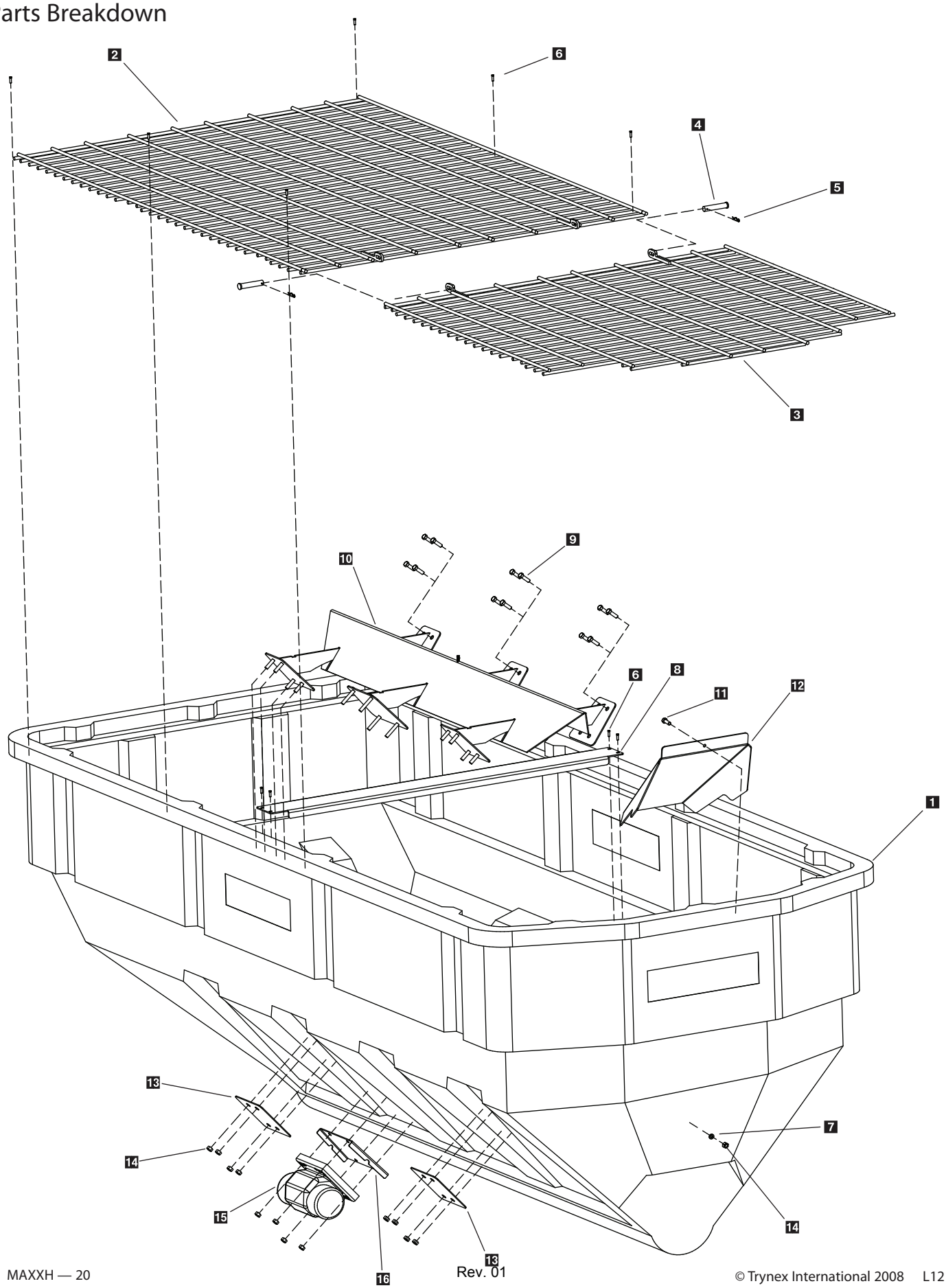

Rev. 01

© Trynex International 2008 L1215

V-Maxx 9500H Hopper Assembly

Parts Breakdown

Key	Part No.	Description	Qty.
1	D 6886	9500 Hopper	1
2	D 6890	Top Screen Front Section	1
3	D 6892	Top Screen Rear Section	1
4	D 6866	Top Screen Hinge Pin	2
5	D 4134	Top Screen Hinge Pin Clip	2
6	D 6874	1/4" x 1-1/2" Self Drilling Screw	10
7	D 4125	3/8" Flat Washer	1
8	D 6898	Hopper Cross Bar Support	1
9	D 4122	3/8-16 x 1-1/2" HHCS	12
10	D 6888	Inverted-V Assembly	1
11	D 4121	3/8"-16 x 1" Hex Bolt	1
12	D 6869	Salt Discharge Baffle	1
13	D 6811	Inverted-V Backing Plates	5
14	D 4124	3/8"-16 Nylock Nut	25
15	D 6899	Heavy Duty Vibrator	1
16	D 6860	Vibrator Backing Plate	1

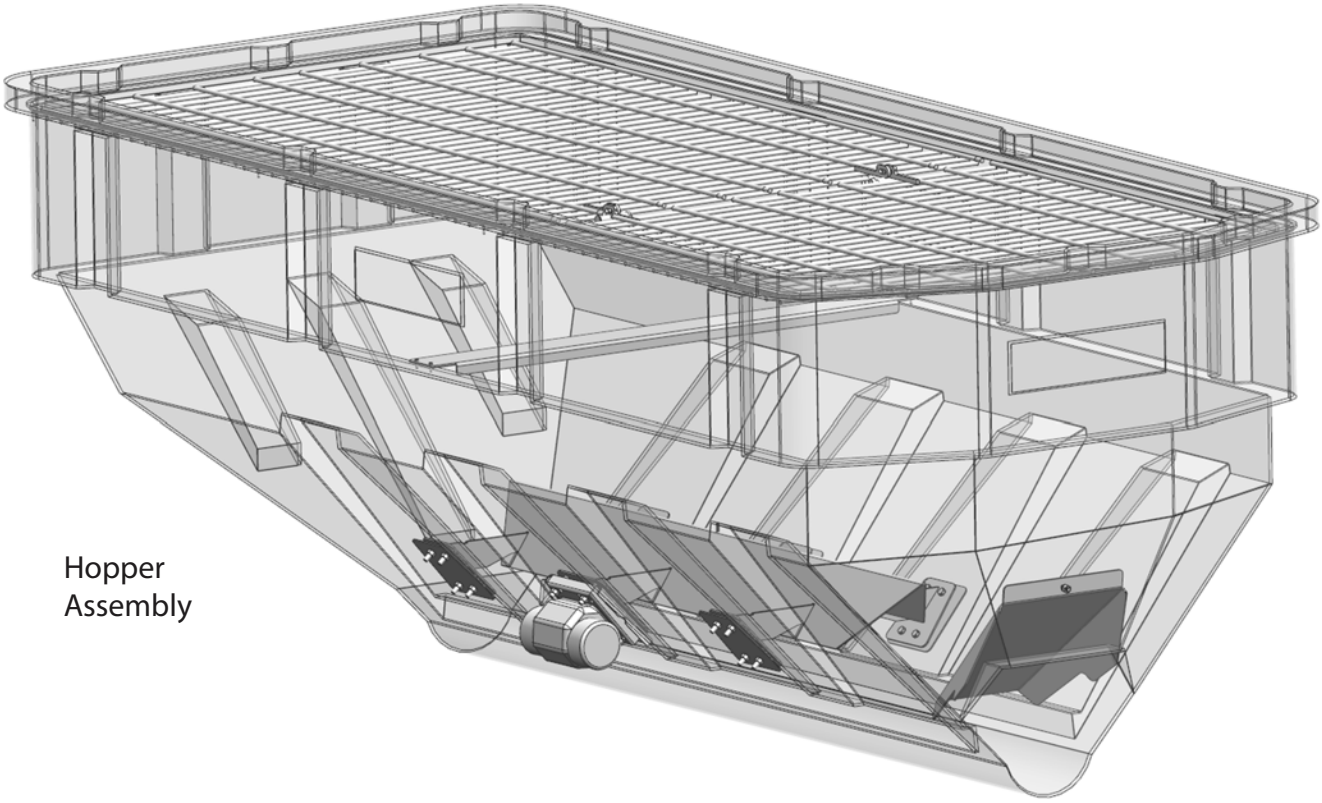

Hopper Assembly

V-Maxx 2400H Hopper Assembly

Parts Breakdown

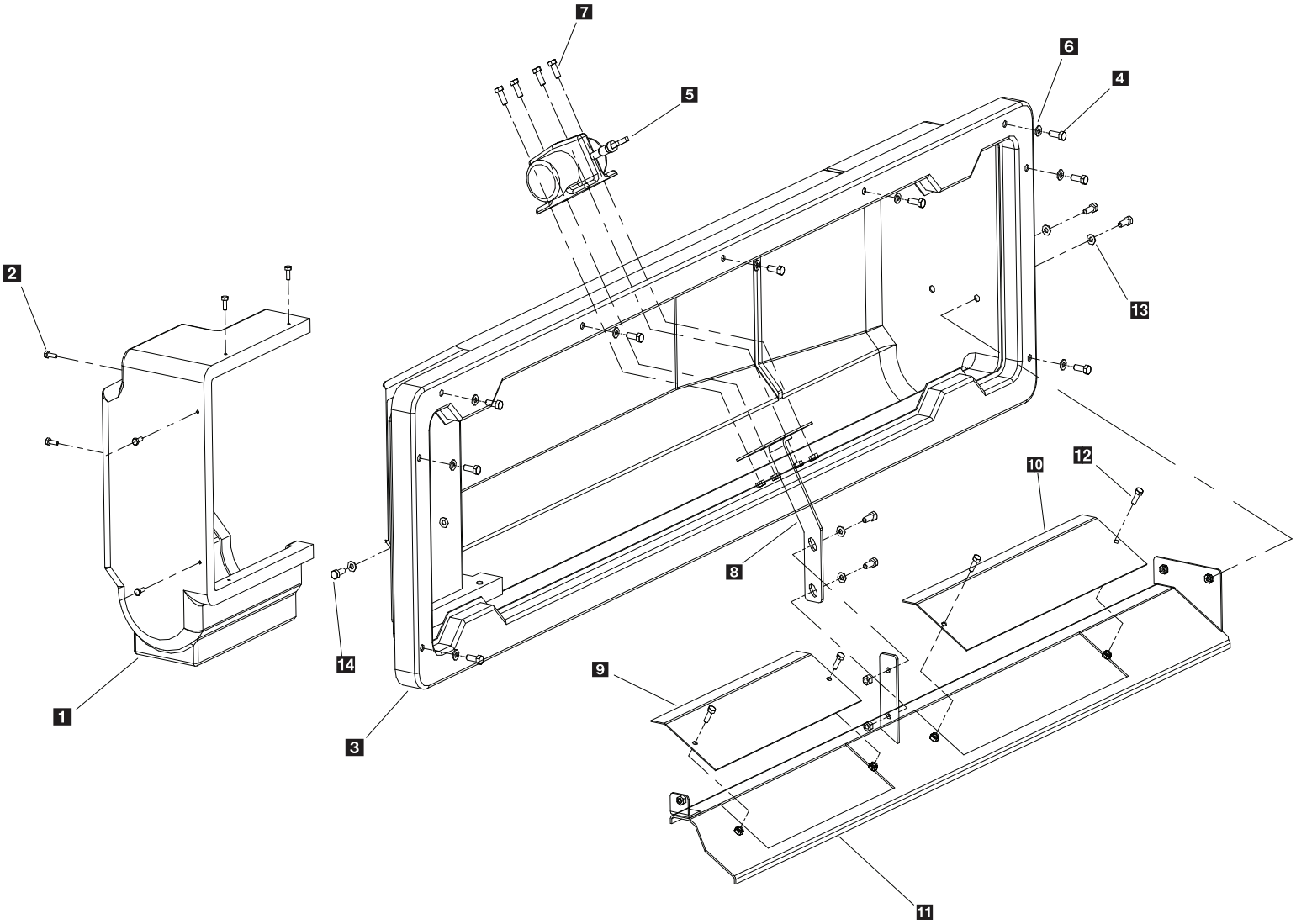

Rev. 01

© Trynex International 2008 L1215

V-Maxx 2400H Hopper Assembly

Parts Breakdown

Key	Part No.	Description	Qty.
1	D 5710	Hopper Auger Motor Cover	1
2	D 6131	1/4-20 x 1/2" SS HWH Serrated TCS	6
3	D 5700	RTG Hopper	1
4	D 5724	3/8-16 x 2-3/4 HHCS	9
5	D 6515	Heavy Duty Vibrator	1
6	D 4125	3/8" Flat Washer	11
7	D 4122	3/8-16 x 1-1/2 HHCS	4
8	D 5711	Vibrator Link Arm	1
9	D 5713	Short Baffle Plate	1
10	D 5714	Long Baffle Plate	1
11	D 5712	Interior Main Baffle Support Frame	1
12	D 6133	5/16 x 1/2" HHCS SS	4
13	D 6165	5/16 Flat Washer	3
14	D 4121	5/16-18 x 1" HHCS SS	3

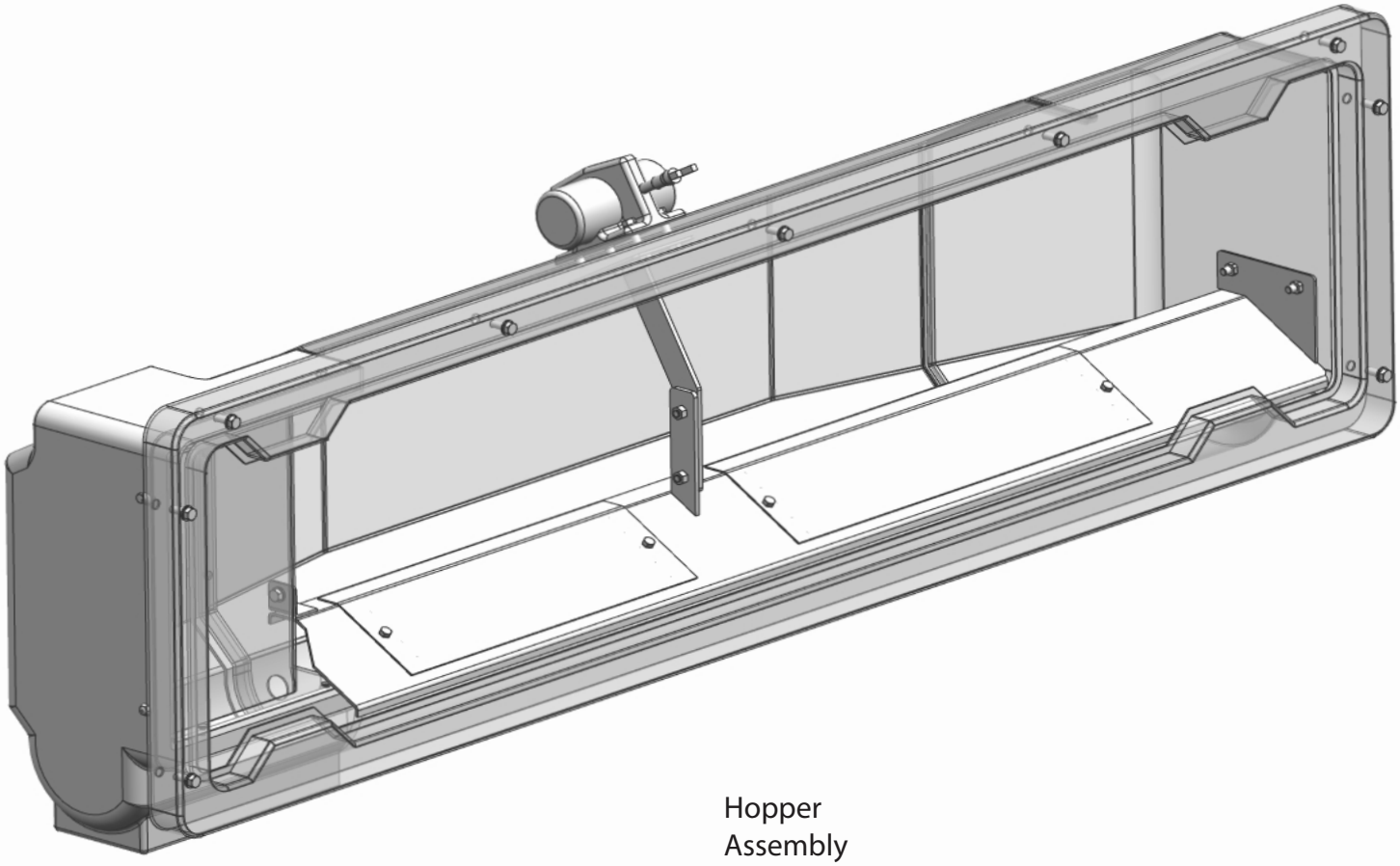

Hopper
Assembly

V-Maxx 8500H Frame Assembly

Parts Breakdown

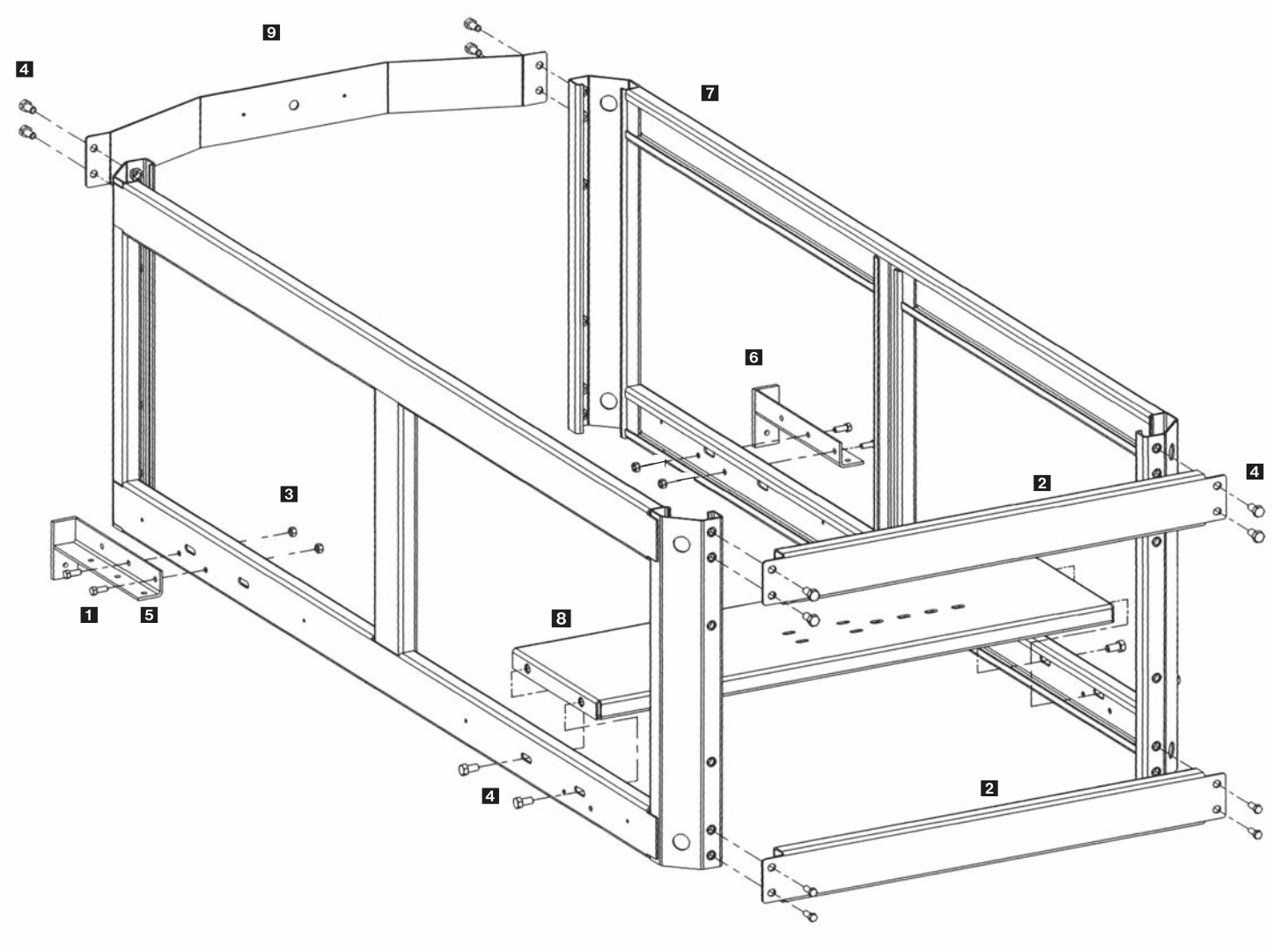

Rev. 01

L1215 © Trynex International 2008

V-Maxx 8500H Frame Assembly

Parts Breakdown

Key	Part No.	Description	Qty.
1	D 4121	3/8" - 16 x 1" Hex Bolt	4
2	D 6804	Upper/Lower Front Rail	2
3	D 4124	3/8" Nylock Nut	4
4	D 6528	1/2-13 x 1" Serrated Hex Bolt	16
5	D 6536	Right Stop Bracket	1
6	D 6537	Left Stop Bracket	1
7	D 6801	Side Frame Weldment	2
8	D 6806	Auger Motor Trans Support	1
9	D 6805	Rear Apron	1

V-Maxx 9500H Frame Assembly

Parts Breakdown

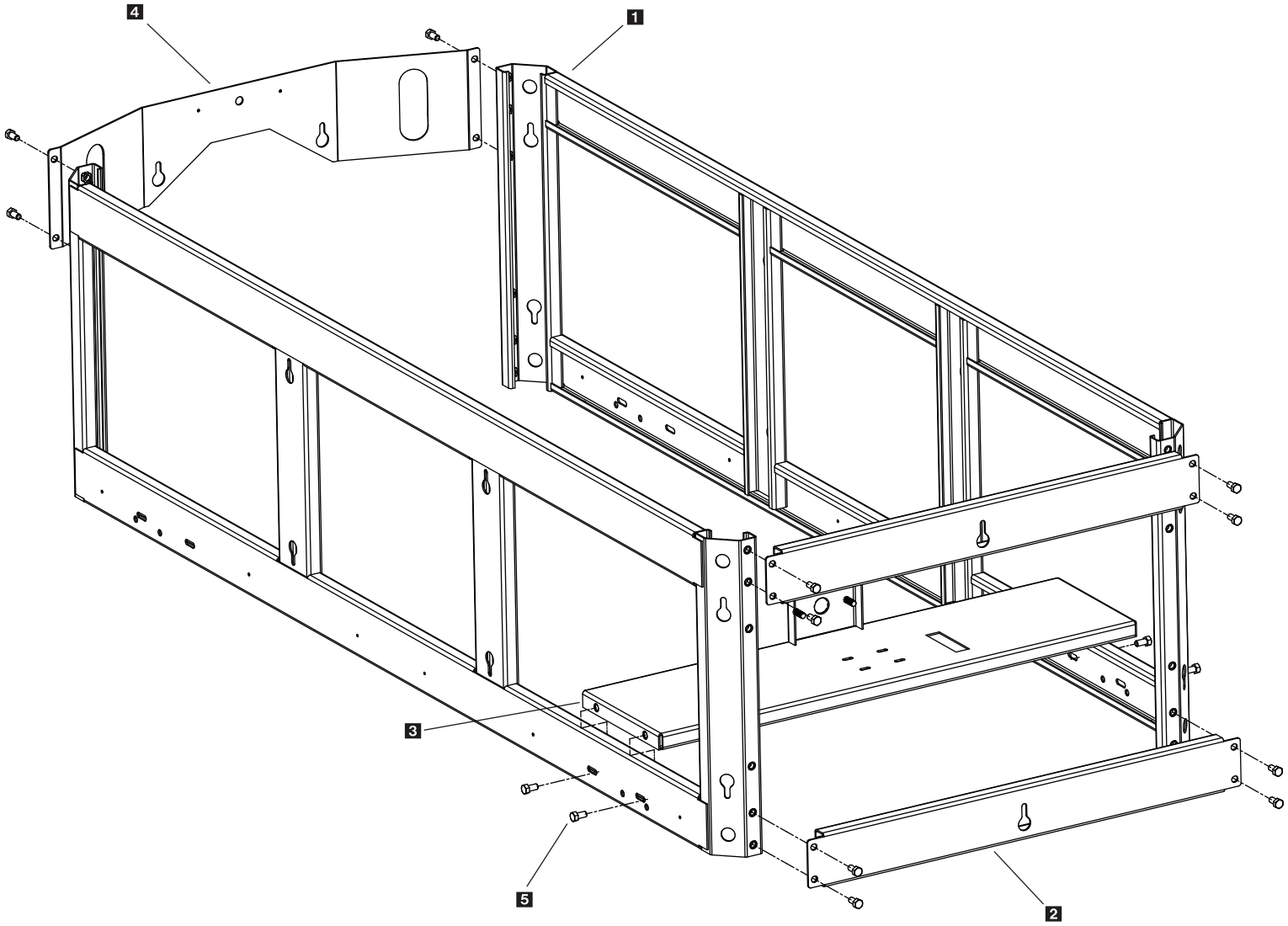

Rev. 01

L1215 © Trynex International 2008

V-Maxx 9500H Frame Assembly

Parts Breakdown

Key	Part No.	Description	Qty.
1	D 6879	9500 Frame Weldment	2
2	D 6882	Upper/Lower Front Rail	2
3	D 6884	Auger Motor/Transmission Support	1
4	D 6880	Rear Apron With Light Hole Knock Outs	1
5	D 6528	1/2"-13 x 1" Serrated Hex Head Bolt	16

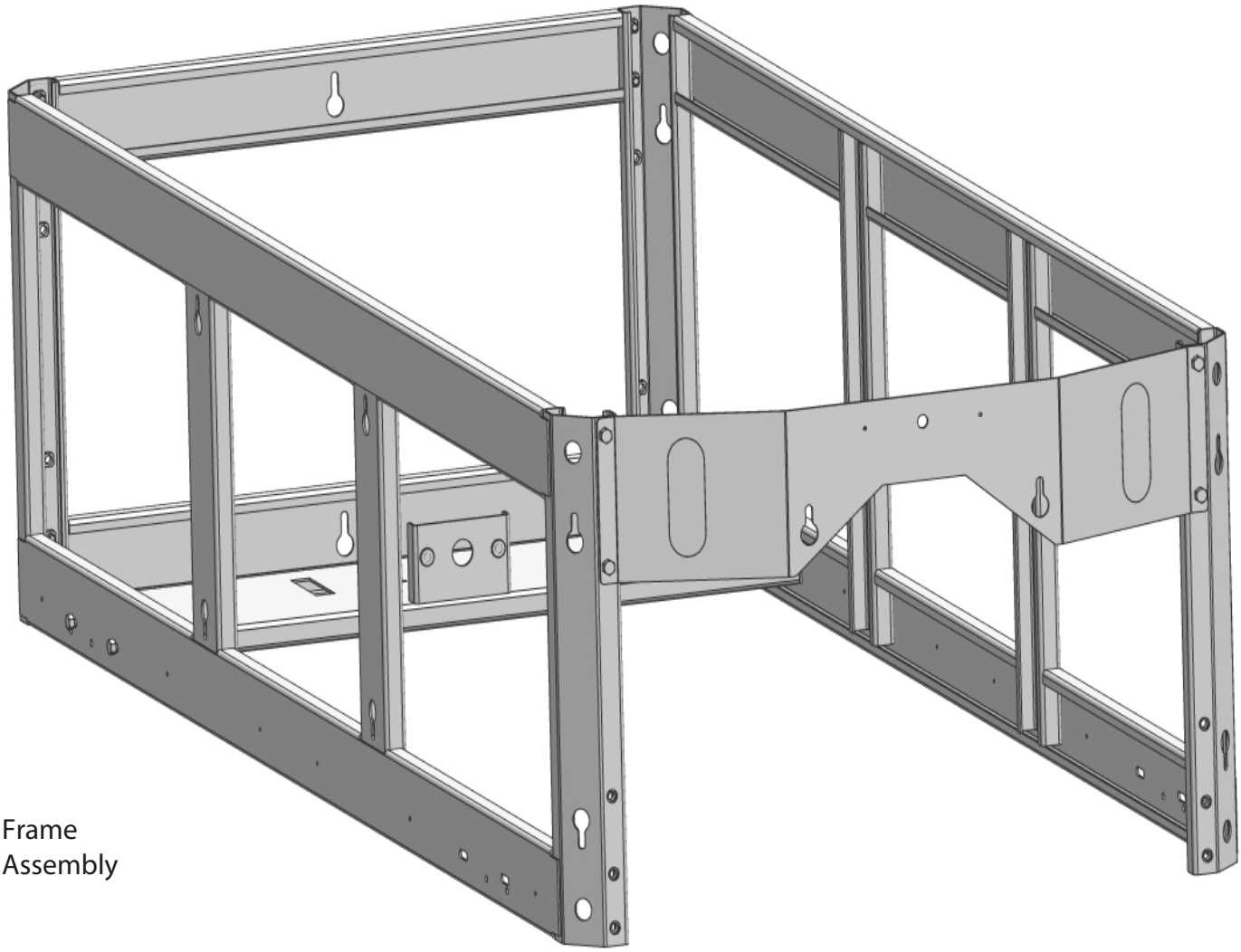

Frame Assembly

V-Maxx 2400H Frame Assembly

Parts Breakdown

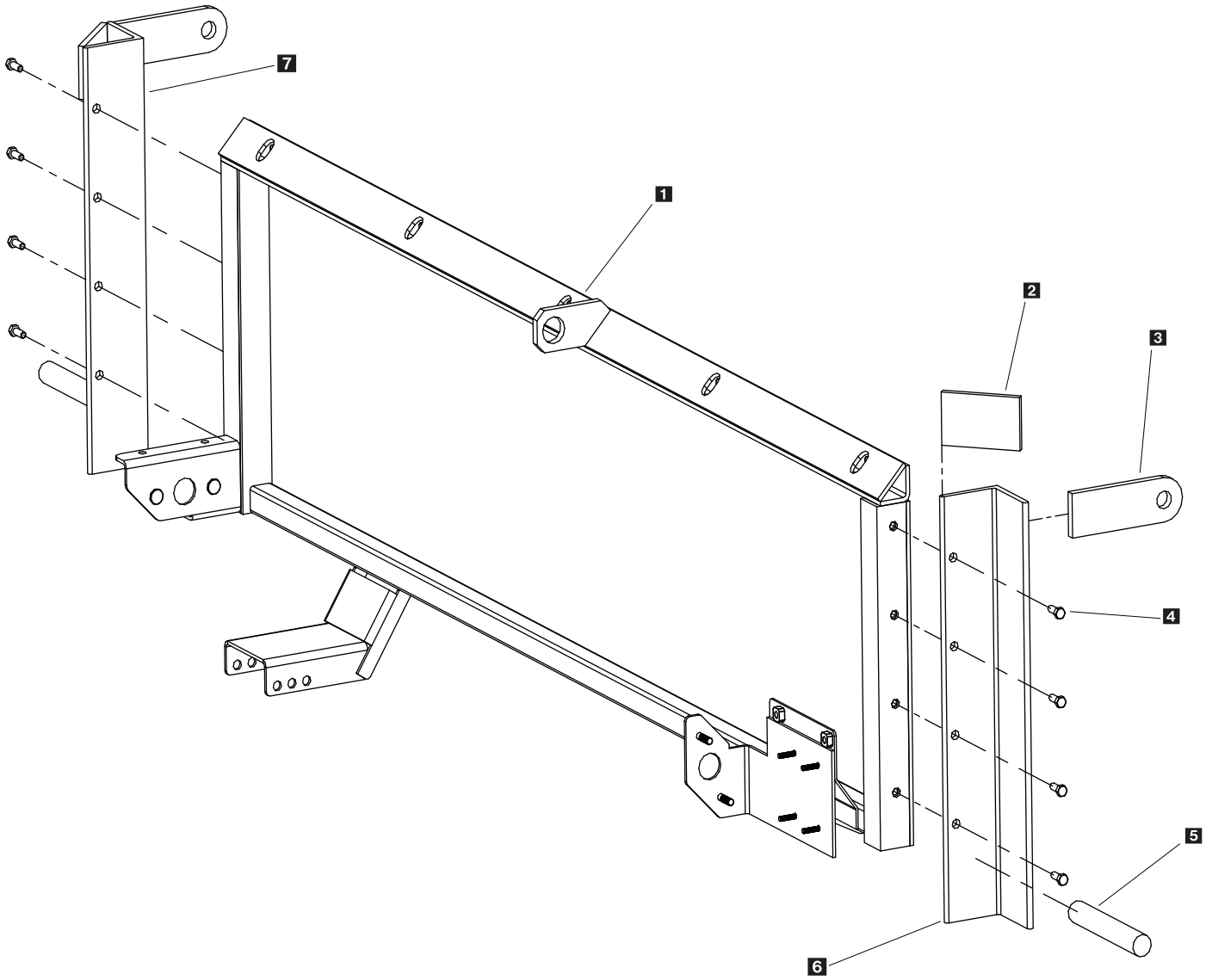

Rev. 01

L1215 © Trynex International 2008

V-Maxx 2400H Frame Assembly

Parts Breakdown

Key	Part No.	Description	Qty.
1	D 5705	2400 Frame Weldment	1
2	D 5736	Upper Gussett	2
3	D 5728/29	Upper Pin Bracket 1.125 & 1.0	2 ea.
4	D 4122	3/8-16 x 1-1/2 HHCS	8
5	D 5730/31/32	Lower Pin 1.25, 1.0, .750	2 ea.
6	D 5735	Right Hand Main Bracket	1
7	D 5734	Left Hand Main Bracket	1

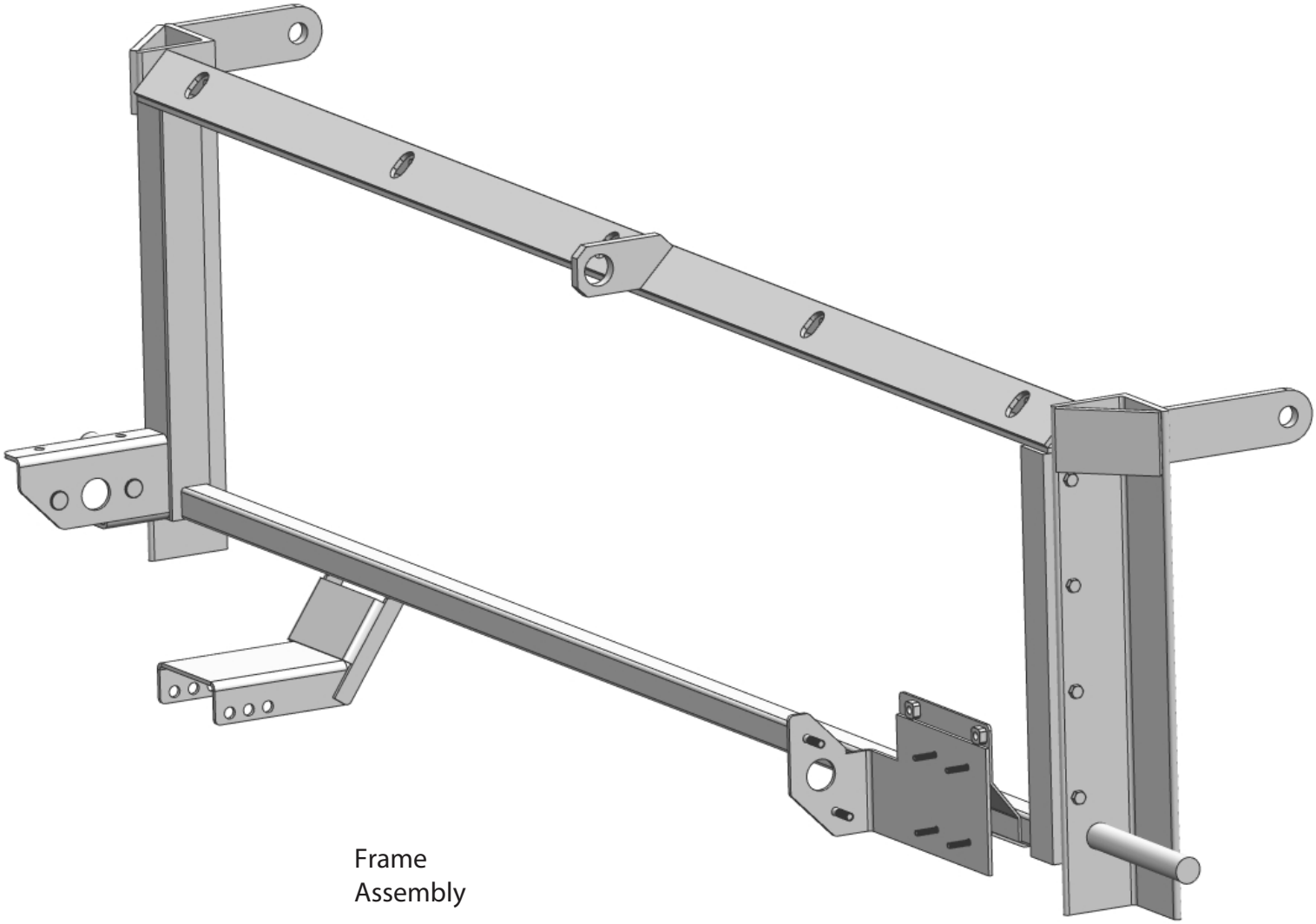

Frame
Assembly

© Trynex International 2008 L1215

Vehicle Harness Wiring Instructions

For All Hydraulic Series Spreaders

Step 1: Take vehicle harness assembly and light kit harness assembly and route from the rear of the vehicle to the front. Route harness along frame and attach to frame holes and frame supports. It is not recommended to attach to fuel or brake lines for obvious reasons. Do not route close to exhaust system or engine, even though Snowex uses high temperature wiring, it still could melt under extreme heat and short the spreader electrical system, as well as the vehicle electrical system.

Step 2: Mount rear plug on bumper using supplied bolts, locate towards the center of the bumper to reduce the amount of debris that could contact the plug. Important: Apply a small amount of dielectric grease to the plug. Also try to mount so plug faces upward to help keep plugs tightly sealed.

Step 3: Secure harness from the rear to the front using heavy duty ty-wraps or frame clips along the frame and lighter duty ty-wraps everywhere else.

Step 4: Layout harness portion that connects to the battery along the fire wall and fender well. Do not connect power leads to battery yet. Drill a 3/4" hole in the fire wall, or use existing access hole, for the control portion of the harness and route connector and harness through hole. Be sure to check the area on the other side of the fire wall to make sure you are not going to drill into the vehicle harness or a control module. Generally you can drill on either side of the steering wheel for a good location.

Step 4A: The power harness from control box to battery will need to be routed from the inside of the cab to the battery – this results from the large high amperage connector. Route leads with lugs to battery — do not connect power at this time.

Step 5: Connect harness to the back of the controller and mount to a suitable location. NOTE: You may want to contact customer before mounting controller, some prefer not to have holes drilled into the dashboard. Ty-wrap loose controller harness and move to the engine compartment. Do not mount close to any heater vents.

Step 6: Connect power leads to the battery: Red + Positive, Black – Negative, always connect to the primary battery if using a dual battery system, secure loose loom to any other large or medium vehicle harness with medium duty ty-wraps this will secure wiring harness.

Step 7: Push the ON/OFF button on the controller to check for power, when that has been confirmed turn power **OFF**. The electrical portion of the installation is complete.

© Trynex International 2008 L1215

V-Maxx 8500H Electrical System

Parts Breakdown

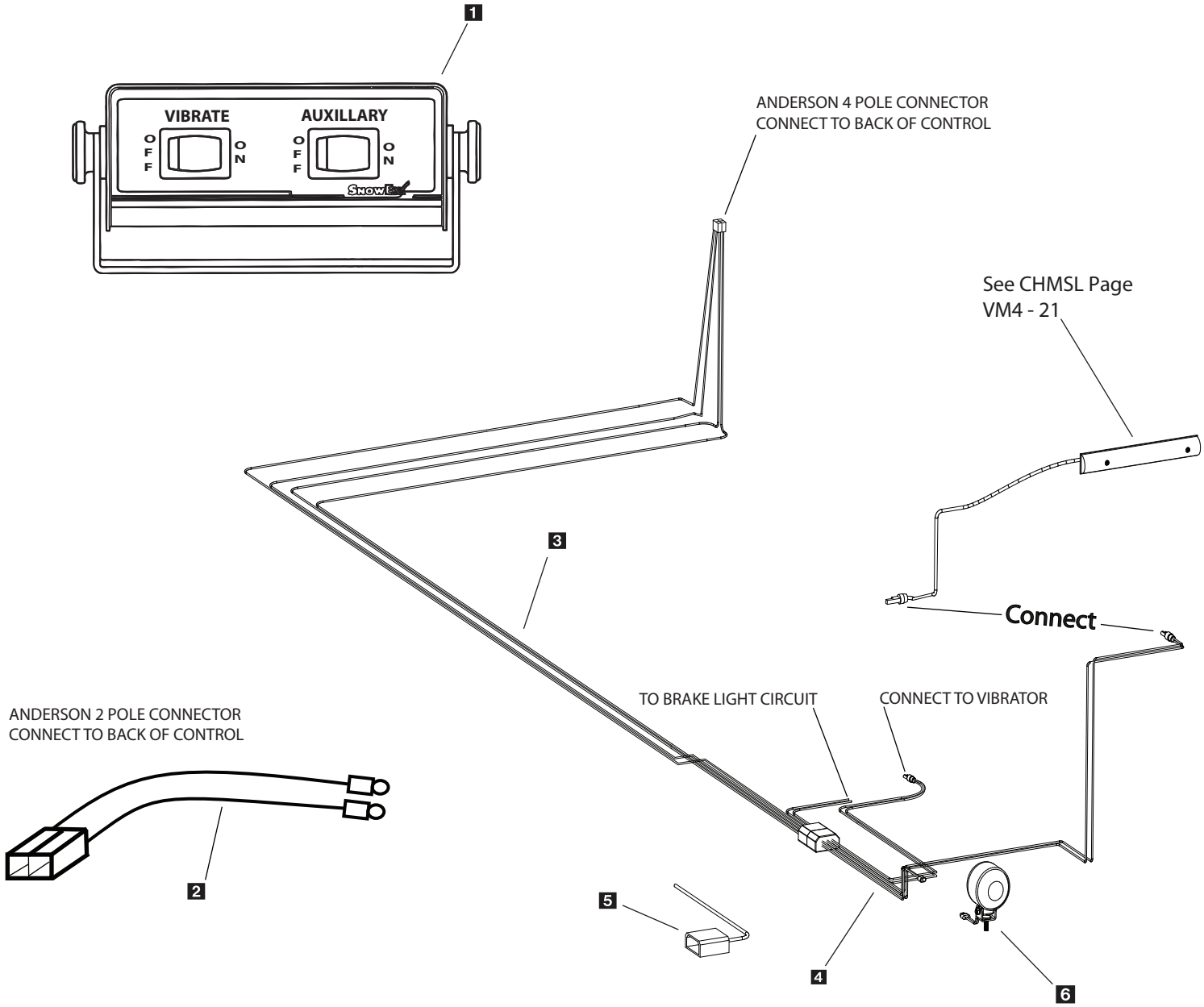

Key	Part No.	Description	Qty.
1	D 5774	Spreader Control	1
2	D 5772	Control Power Harness	1
3	D 5771	Vehicle Harness	1
4	D 5773	Spreader Harness	1
5	D 6343	Vehicle Harness Dust Cap	1
6	D 6786	Work Light	1

V-Maxx 9500H Electrical System

Parts Breakdown

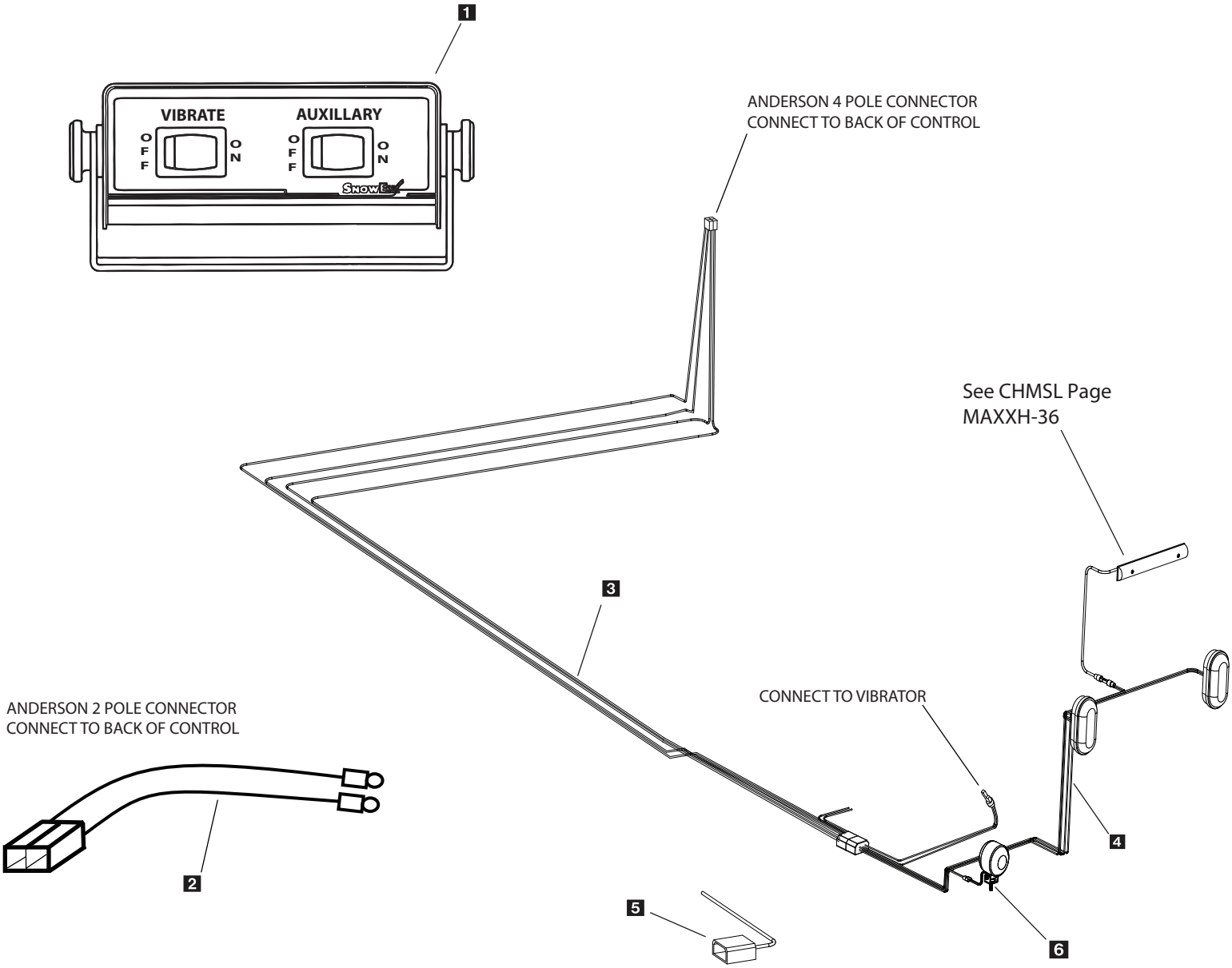

Key	Part No.	Description	Qty.
1	D 5774	Control	1
2	D 5772	Control Power Harness	1
3	D 5771	Vehicle Harness	1
4	D 5780	Spreader Harness	1
5	D 6343	Vehicle Harness Dust Cap	1
6	D 6786	Work Light	1

Rev. 01

© Trynex International 2008 L1215

V-Maxx 2400H Electrical System

Parts Breakdown

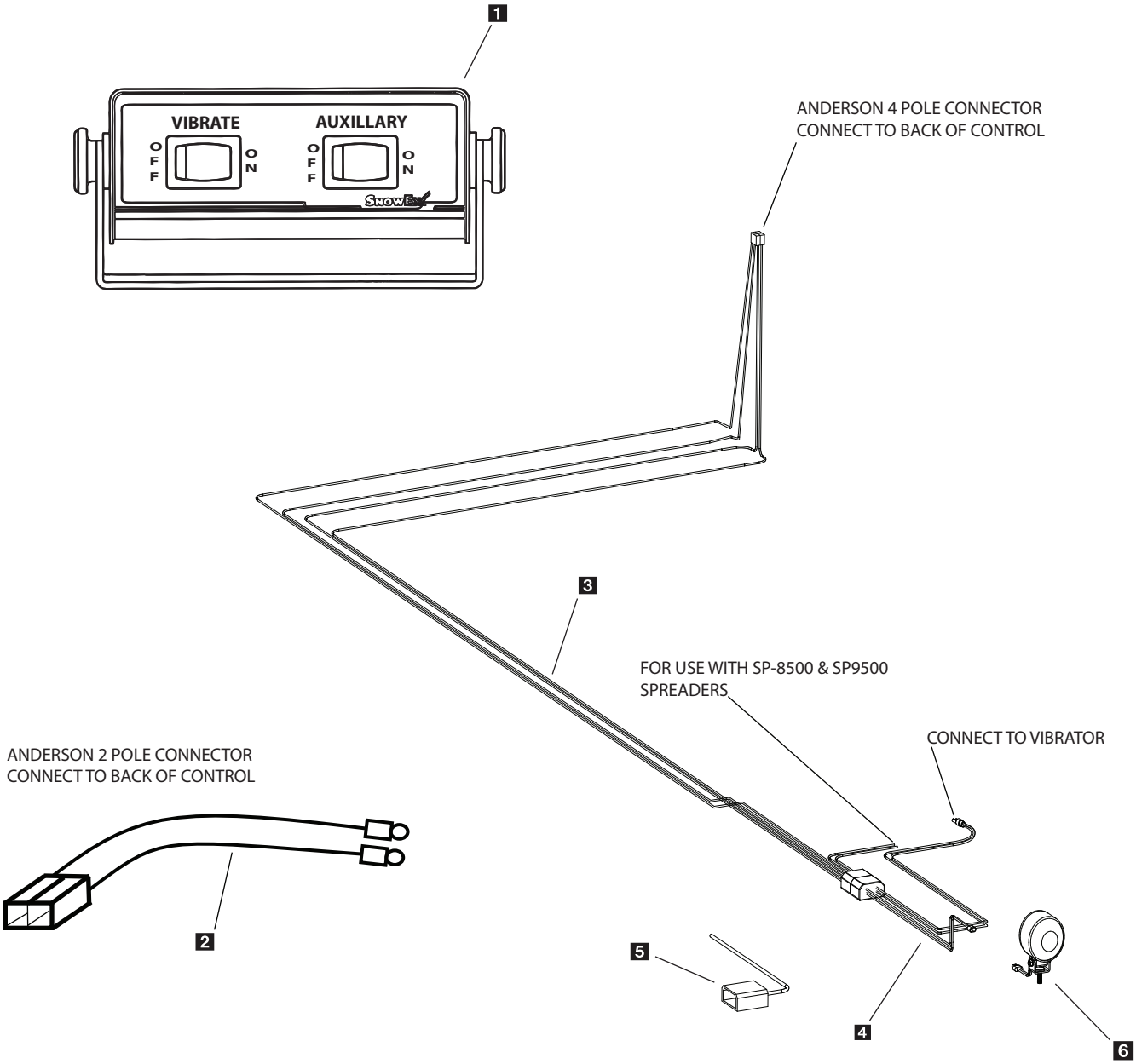

Key	Part No.	Description	Qty.
1	D 5774	Control	1
2	D 5772	Control Power Harness	1
3	D 5771	Vehicle Harness	1
4	D 5781	Spreader Harness	1
5	D 6343	Vehicle Harness Dust Cap	1
6	D 6786	Work Light	1

Spreader Harness

Circuit Diagram For All Hydraulic Spreasders

Harness D-5780 SP-8500H/9500H
Harness D-5781 SP-2400H

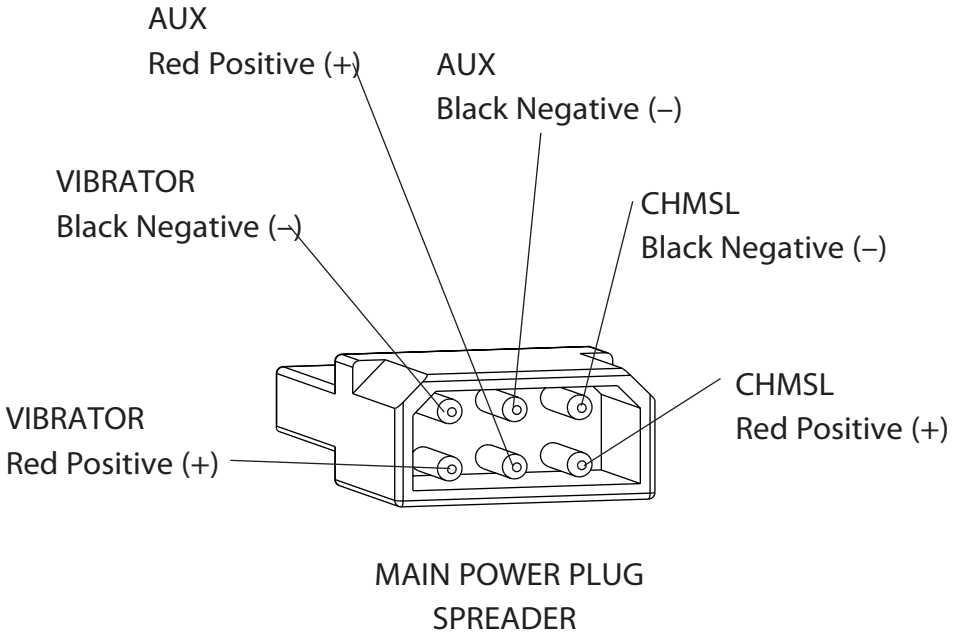

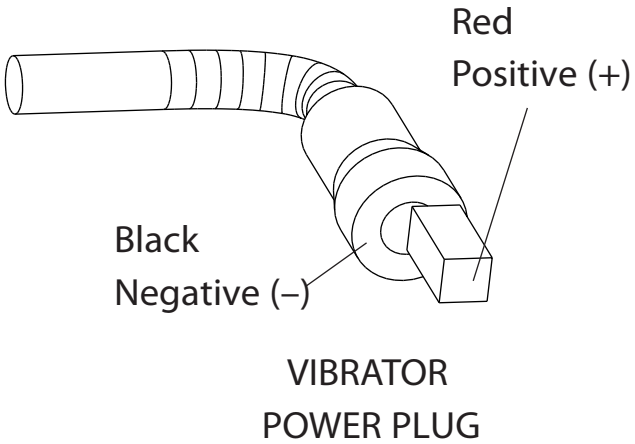

© Trynex International 2008 L1159

D-5771 Vehicle Harness

Circuit Diagram SP-8500H/9500H/2400H

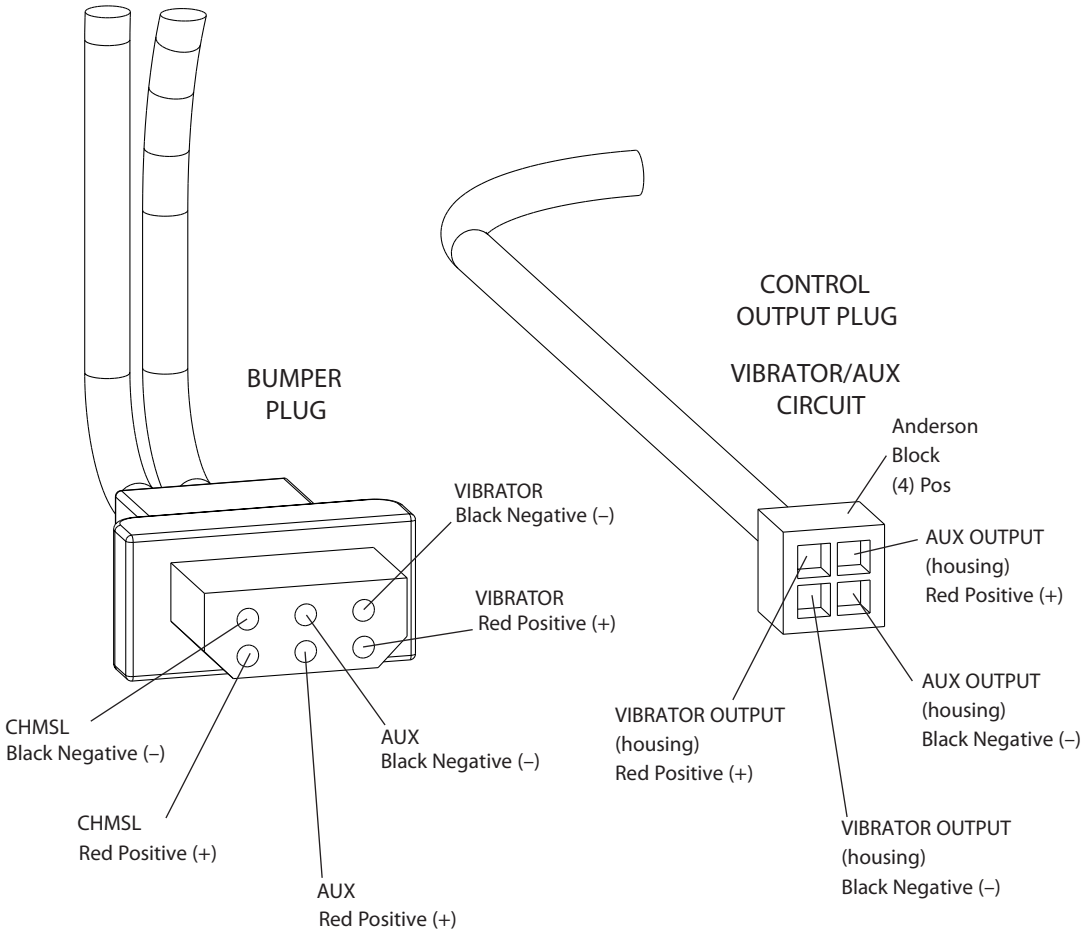

* NOTE: Reference Bumper Plug for Color Code

Center High Mount Stop Lamp (CHMSL)

SP-8500H/9500H

- Locate two short wires in vehicle harness to attach to vehicle brake light circuit.
- Locate vehicle ground wire and stop lamp power wire at rear of vehicle. Use supplied wire taps to connect harness to vehicle electrical system. Once wire taps are installed check to make sure stop lamp works when brake pedal is pressed. Properly complete installation by tying up any loose wires with ty-wraps, also add electrical tape over both connections to insure a solid electrical connection. Some newer trucks have auxiliary stop lamp power leads already at the rear for these types of applications.

CHMSL Spreader Harness

(installed on Spreader from factory)

Key	Part No.	Description	Qty.
1	D 6158	#10 Lock Nut	2
2	D 6514	CHMSL Spreader Harness	1
3	D 6529	#10 Black Oxide Screw	2

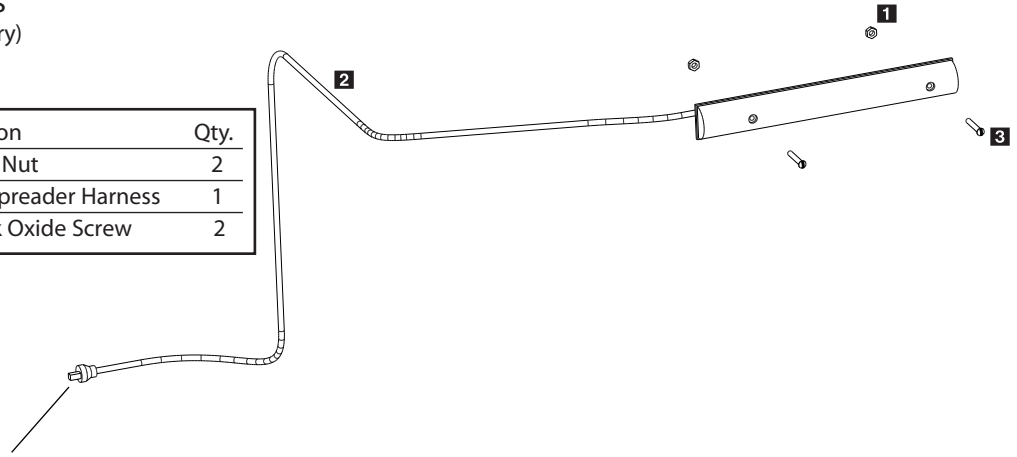

CONNECT TO SPREADER LIGHT HARNESS 2-CONDUCTOR PLUG

Rev. 01

© Trynex International 2008 L1215

Hose Routing Auger SP-8500H/9500H

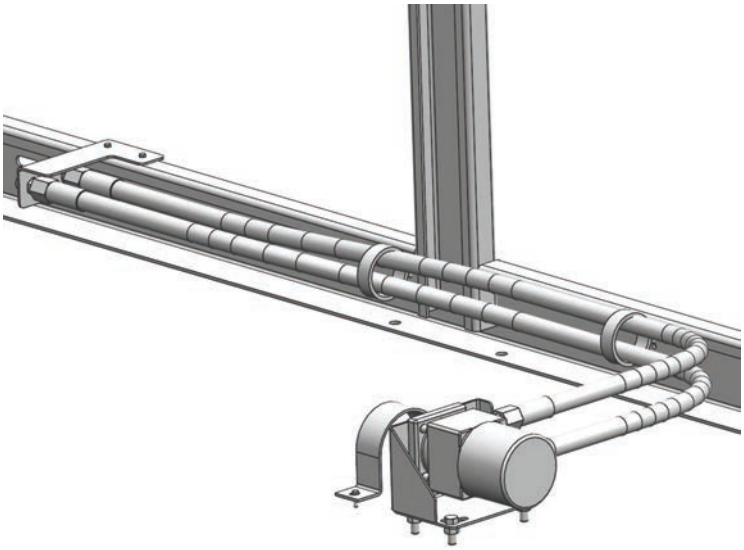

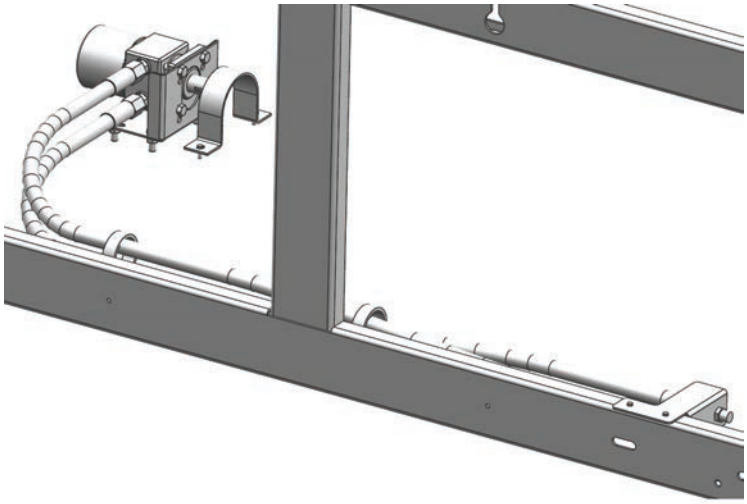

Hose Routing Spinner SP-8500H/9500H (hoses not included with spinner assy)

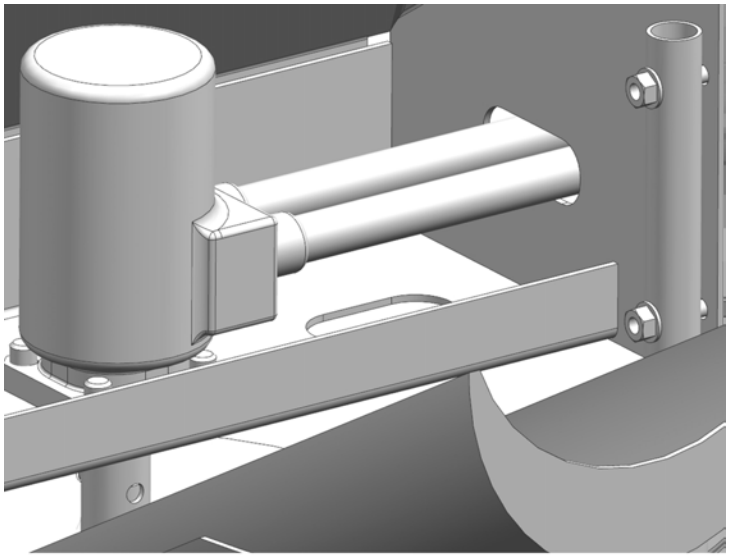

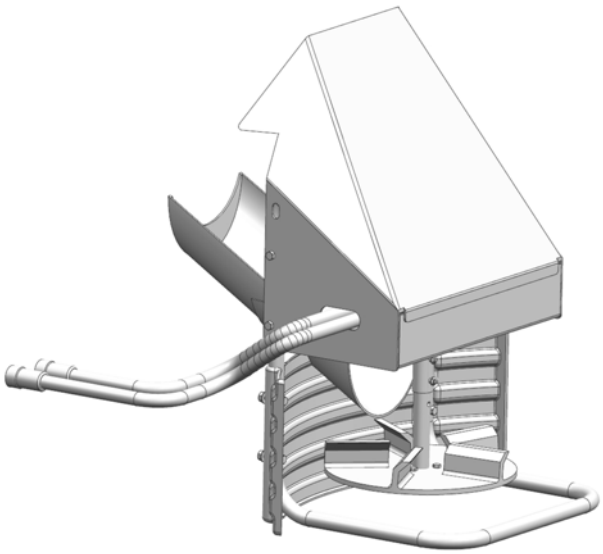

Hose Routing Spinner SP-2400H (hoses not included with spinner assy)

© Trynex International 2008 L1215

V-Maxx 8500H Mounting System

Strapping Techniques

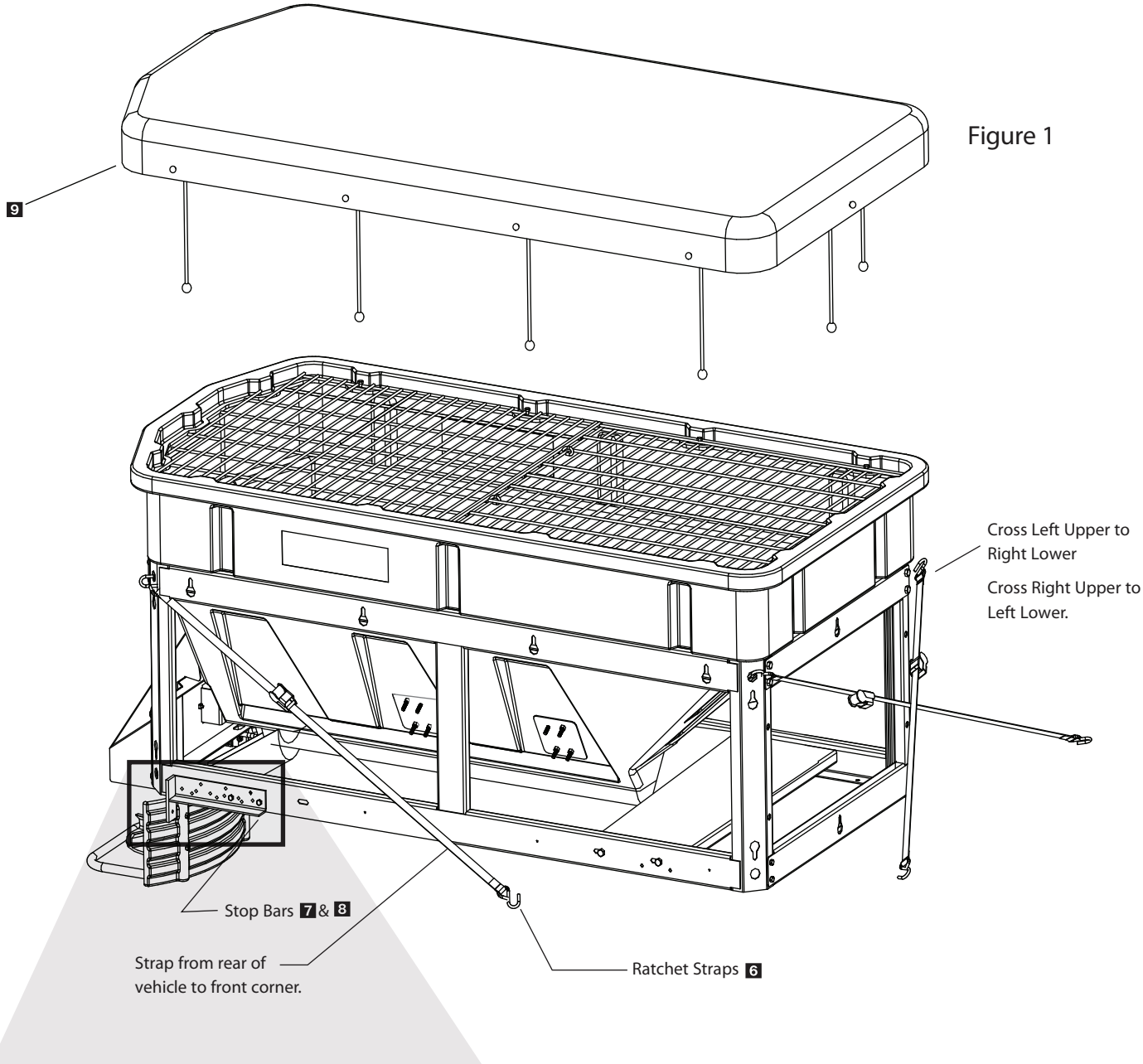

Figure 1

Figure 2: Frame Mounting Bolts

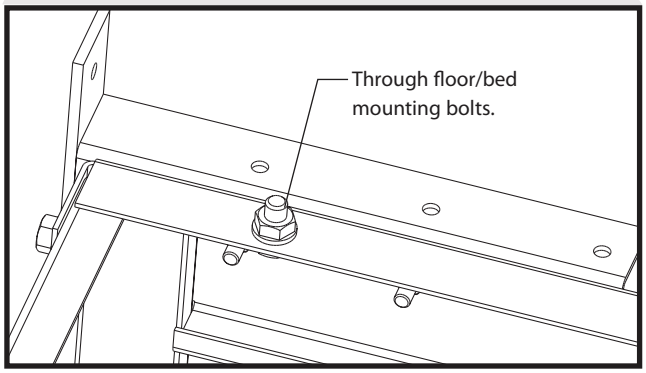

Key	Part No.	Description	Qty.
1	D 4116	1/2" - 13 x 1-1/2" Hex Bolt	4
2	D 4119	1/2" Flat Washer	4
3	D 4120	1/2" Lock Nut	4
4	D 4121	3/8 - 16 x 1" Hex Bolt	4
5	D 4124	3/8" Lock Nut	4
6	D 6856	Ratchet Strap	4
7	D 6536	Adj. Stop Bracket RT	1
8	D 6537	Adj. Stop Bracket LT	1
9	D 6855	Tarp	1

© Trynex International 2008 L1215

V-Maxx 9500H Mounting System

Strapping Techniques

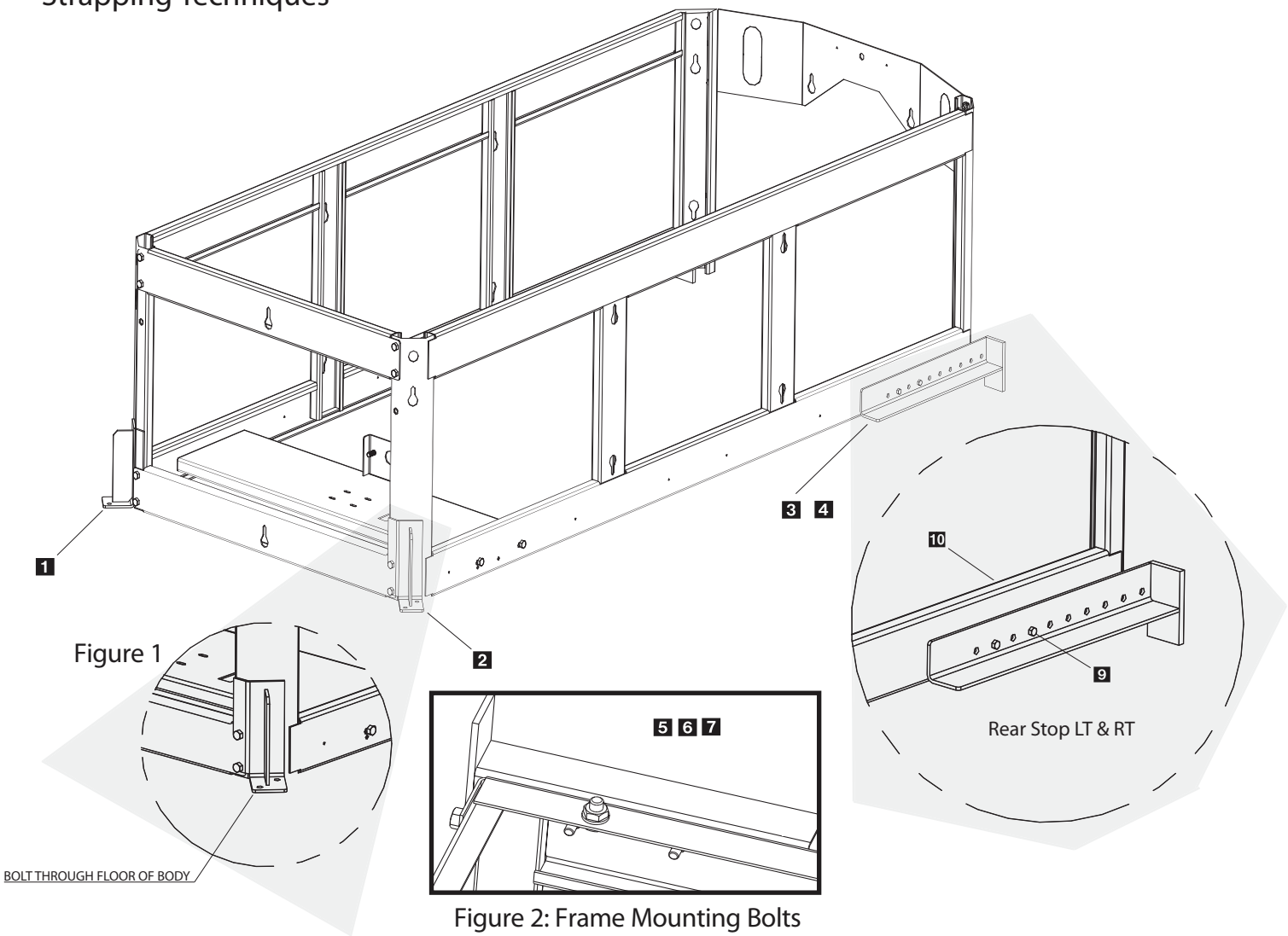

Figure 1

Figure 2: Frame Mounting Bolts

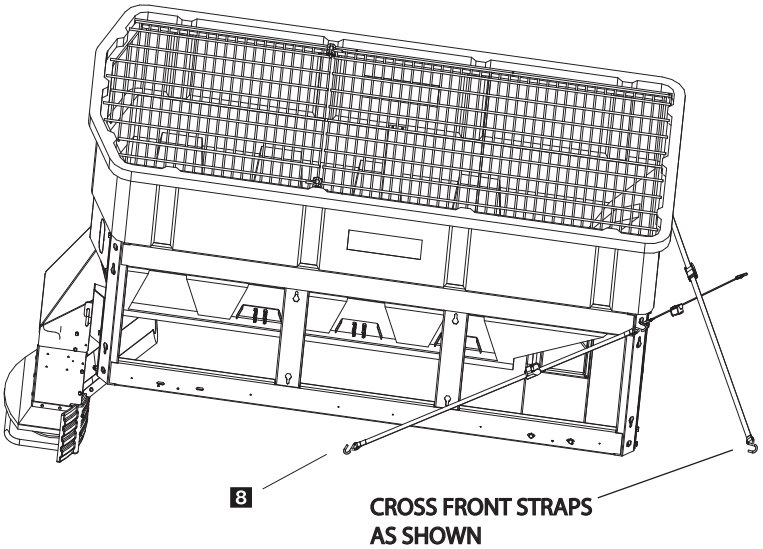

Key	Part No.	Description	Qty.
1	D 6756	Adj. Stop Bracket Rt Rear	1
2	D 6755	Adj. Stop Bracket Lt Rear	1
3	D 6759	Left Front Stop Bracket	1
4	D 6760	Right Front Stop Bracket	1
5	D 4120	1/2" Lock Nut	8
6	D 4116	1/2"-13 x1-1/2" Hex Bolt	8
7	D 4119	1/2" Flat Washer	8
8	D 6758	Ratchet Strap	4
9	D 4121	3/8"-16 x 1" Lock Nut	4
10	D 4124	3/8" Lock Nut	4

© Trynex International 2008 L1215

Mounting Instructions

NOTE: Pay special attention when drilling or clamping dissimilar metals to aluminum bodies. Galvanic corrosion can occur if not handled properly. Contact vehicle manufacturer for recommended practices.

Step 1: Remove tailgate from pickup bed.

Step 2: Load spreader on to truck bed and mount spinner assembly.

Step 3: Slide spreader forward until deflector/chute assembly makes contact with vehicle. Then, slide spreader back approx. 1" to allow for proper clearance.

Step 4: Install stop bars using supplied hole patterns (see Fig.2). To achieve the best position, you may need to drill additional holes in bracket in order to properly position spreader.

Step 5: Now that the spreader is located front to back, you will now center it left to right. Looking at the inside front and rear corner area the lower frame area, you will notice (4) holes in the bottom of the frame. Using a paint pen or similar marking device, mark hole locations.

Step 6: Before drilling holes, look beneath the approximate area where each hole will be located. Make sure there are no vehicle components that will be in the path of the drill before doing this step. If there are interferences, you can relocate holes as needed making sure there are at least two forward and two rearward of the front to back centerline.

Step 7: Install and tighten all (4) bolts.

Step 8: Install ratchet straps (see V-Maxx 8500 H Mounting System: Strapping Techniques). It is very important for everyone's safety this strapping method be used as the standard mounting procedure. (Do not use ratchet straps exclusively.)

Step 9: Connect the spreader power cord to vehicle main power plug mounted at rear of vehicle (see Electrical Installation).

Step 10: Connect Center High Mount Stop Lamp (CHMSL) cord from the spreader to mating half attached to vehicle (see Electrical Installation).

© Trynex International 2008 L1215

Recommended Installation For Platform Bodies

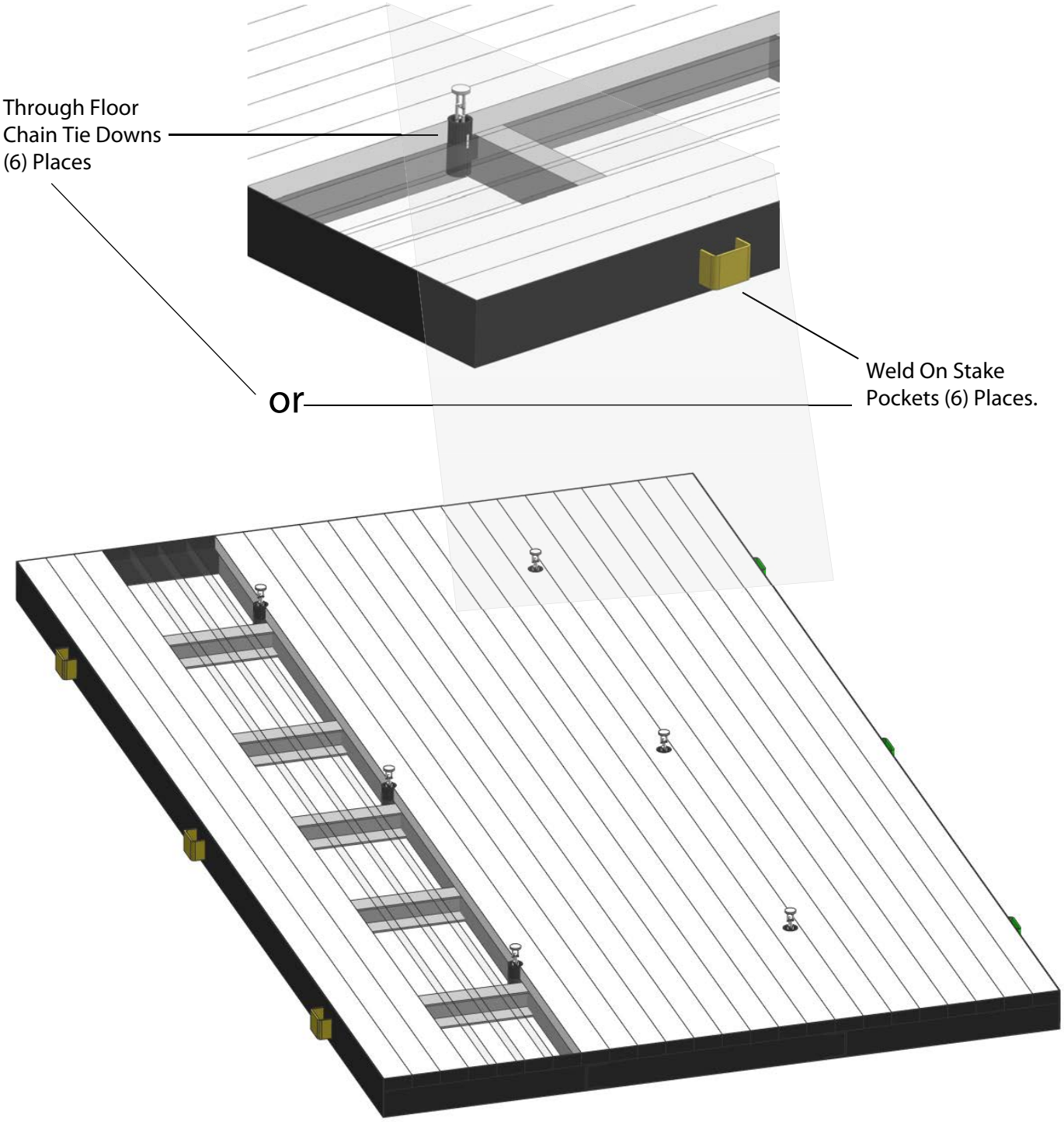

© Trynex International 2008

Mounting Instructions

NOTE: Pay special attention when drilling or clamping dissimilar metals to aluminum bodies. Galvanic corrosion can occur if not handled properly. Contact vehicle manufacturer for recommended practices.

Step 1: Use centrally locatedlifting point on spreader frame. Hang spreader in center of dump body opening, (note) spreader opening must be level with dump floor.

Step 2: Using bolts Provided in kit, mount left and right main angle to spreader frame.

Step 3: Mark and trim angles to appropriate width to match tailgate, remount angles to spreader frame.

Step 4: Using correct pin size provided in kit for lower latch pin, measure and cut pin to correct length. Clamping pins in correct location, tack weld pins to angles securely and lock lower hinge point.

Step 5: Using correct pin/ears provided for upper hings point, measure and cut to correct length. Clamping ears in correct location, tack weld securely to the left and right main angles (see page 8-23) and secure upper hinge point.

Step 6: Double check that spreader will remove and install with ease.

Step 7: If using ears for upper hinge point support, upper gussetts must be welded directly behind mounting ears. (see page 8-23)

Step 8: Complete welding pins and ears to angle fully.

Step 9: Remove angles from spreader for paint and reinstall.

Mounting Instructions for self leveling spinner bracket

Step 1: Secure long leveling rod D-5741 to spinner enclosure through bottom hole in bracket with hair pin clip through hole hole in pin (see fig 1)

Step 2: Mount drive leveling bracket D-5738 to frame rail 4" below center of hinge. Weld or bolt in place (see fig 2)

Step 3: Connect D-5740 short leveling rod to drive leveling bracket with hair pin clip. Align both rods next to each other (see fig2) and weld togther.

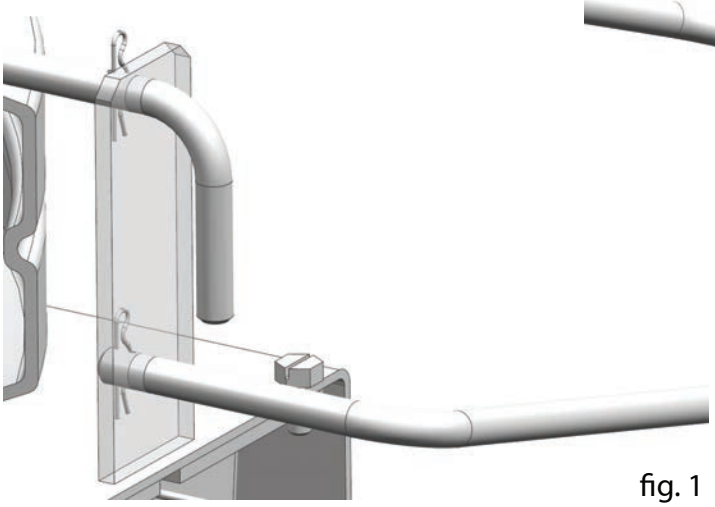

fig. 1

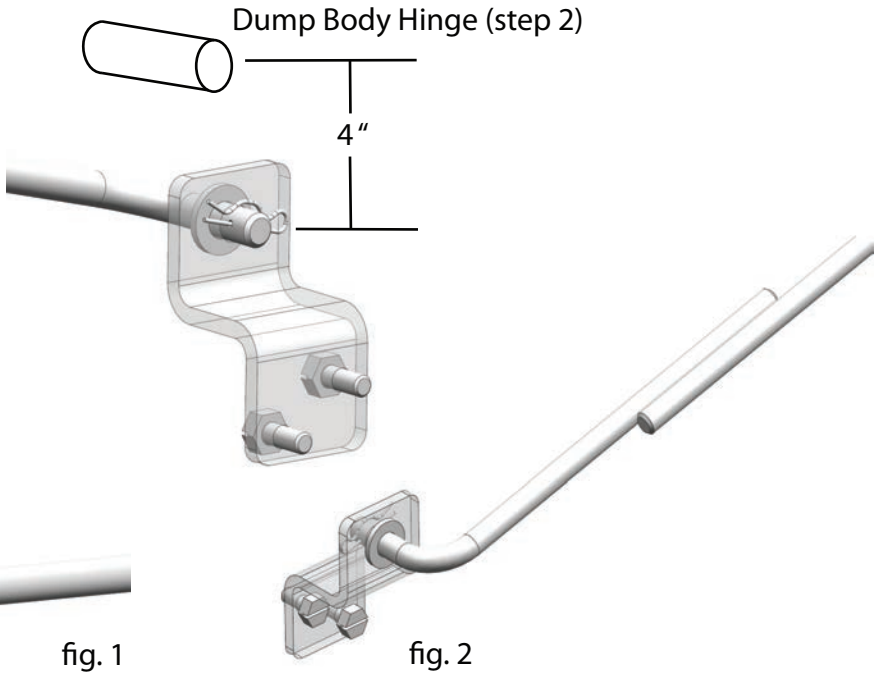

fig. 2

V-Maxx 2400H

Mounting System

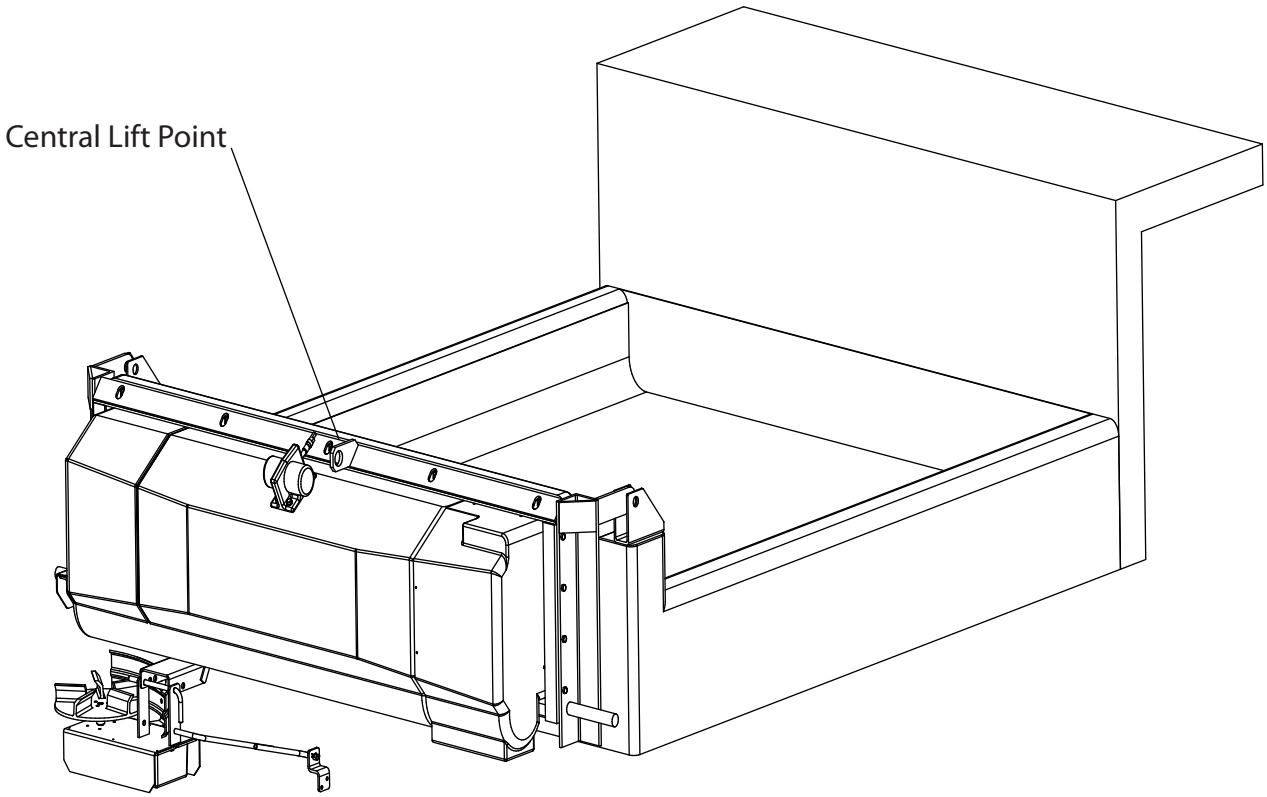

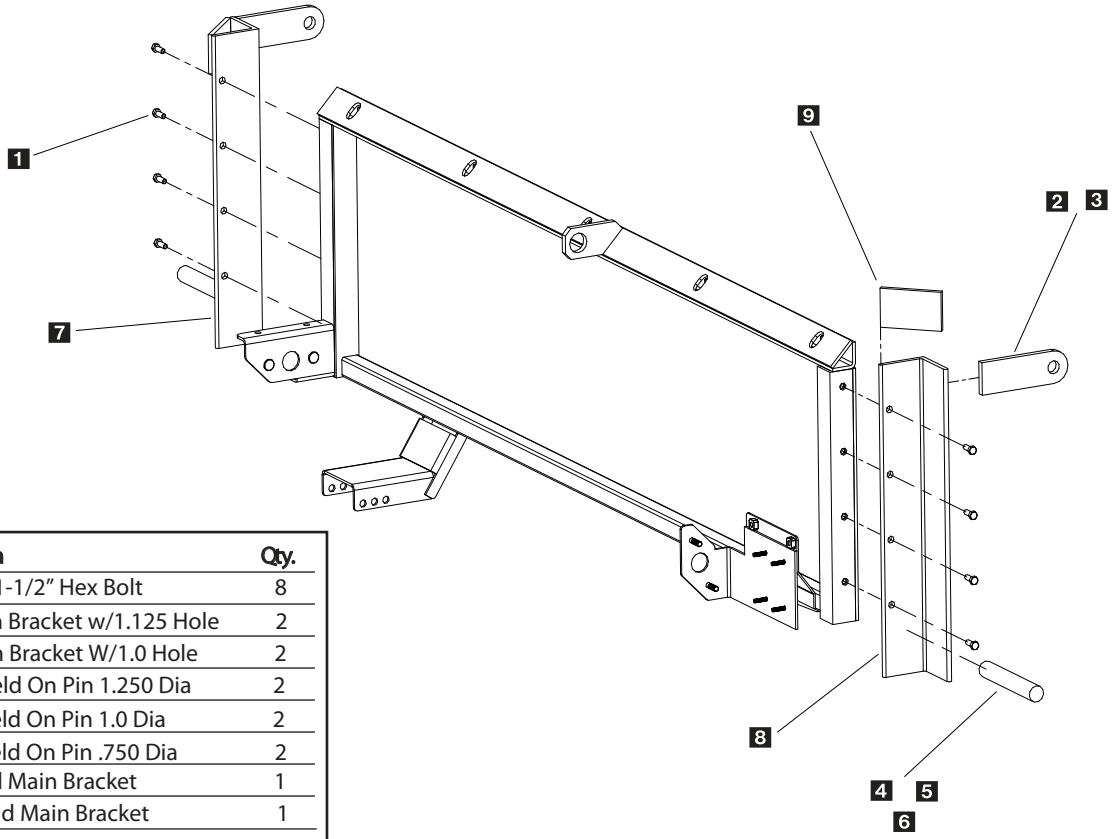

Key	Part No.	Description	Qty.
1	D 4122	3/8"-16 x1-1/2" Hex Bolt	8
2	D 5728	Upper Pin Bracket w/1.125 Hole	2
3	D 5729	Upper Pin Bracket W/1.0 Hole	2
4	D 5730	Lower Weld On Pin 1.250 Dia	2
5	D 5731	Lower Weld On Pin 1.0 Dia	2
6	D 5732	Lower Weld On Pin .750 Dia	2
7	D 5734	Left Hand Main Bracket	1
8	D 5735	Right Hand Main Bracket	1
9	D 5736	Upper Gussett	2

© Trynex International 2008 L1215

PREPARATION

CAUTION – Sweep area clear of foreign objects or obstacles that could cause personal injury. Keep other persons, children, or animals out of the area to be spread.

SPREADER LOADING

WARNING – Do not overload vehicle. Use chart below to calculate weight of material. Weights of material are an average for dry materials .

Material	Weight Per Cubic Ft.
Rock Salt	35-40 lbs.
Sand/Salt Mix	95-120 lbs.

- Be sure to comply with manufacturer's maximum gross vehicle weight ratings.
- Warning– Never leave materials in hopper for long periods of time as salt is hygroscopic and will attract atmospheric moisture and harden up. When spreading sand mix, a 1:1 ratio for Sand/Salt mix is recommended to prevent the material from freezing.

SPREADING TIPS

- Never exceed 10 m.p.h. when spreading.
- For a wider pass, increase spinner speed.
- For a heavier pass, drive slower, or increase auger speed.
- Never operate spreader near pedestrians.
- Spread ice melters with the storm to prevent unmanageable levels of ice.
- Calculate spread pattern when near vegetation.

V-MAXX 8500H/9500H/2400H OPERATION

- Speed of auger and spinner may be adjusted separately to get desired flow and spread distance from spreader.
- The Vibrator Switch is needed for dense material or to increase the flow to the auger. This eliminates bridging of material in hopper.

BAFFLE EXTENSION INSTRUCTIONS SP-8500H

- The Baffle Extension is installed at the time of assembly. The main purpose of this baffle is to keep dry, free-flowing material from leaking out.
- If you plan on using damp/wet materials, you should remove this baffle by removing the self-drilling screws.
- If you are using a sand/salt mixture, remove baffle extension.

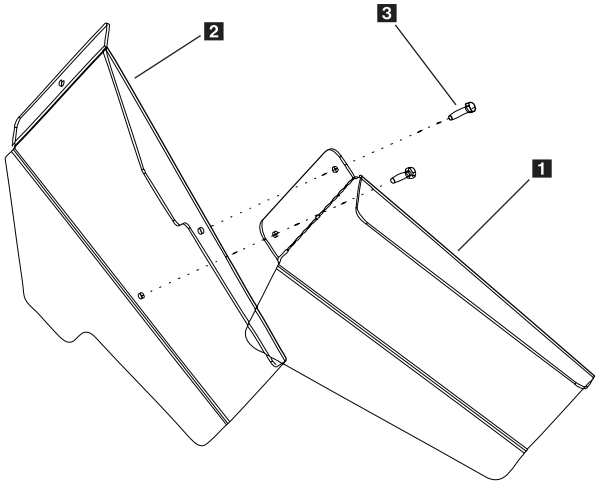

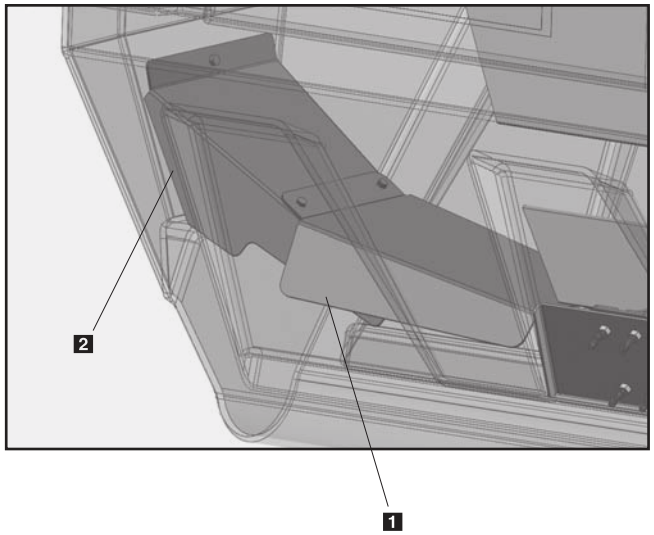

Key	Part No.	Description	Qty.
1	D 6847	Salt Baffle Extension	1
2	D 6807	Discharge Baffle	1
3	D 6874	#14 x 1-1/2" TEK w/Neo Washer	2

© Trynex International 2008 L1215

SP-2400H INTERIOR BAFFLE & INVERTED-V INSTRUCTIONS

- The SP-2400H uses a multi-function baffle syetm over the auger area.
- This twin bafle design is used to reduce load on the auger drive train which controls amperage load to the electrical system. It must not be removed unless servicing the unit.
- There are two covers provided one long and one short. They can be removed in different combinations depending on the material type or moisture content. Ultimately they aid in controling material flow to the auger area, however for wet sand both baffles should be removed.
- The baffle system is also connected to the vibrator link arm assembly to assist with material flow. Make sure vibrator bolts and link arm hardware are tight before operating spreader
- WARNING: Always disconnect power source before attempting to remove material baffle.

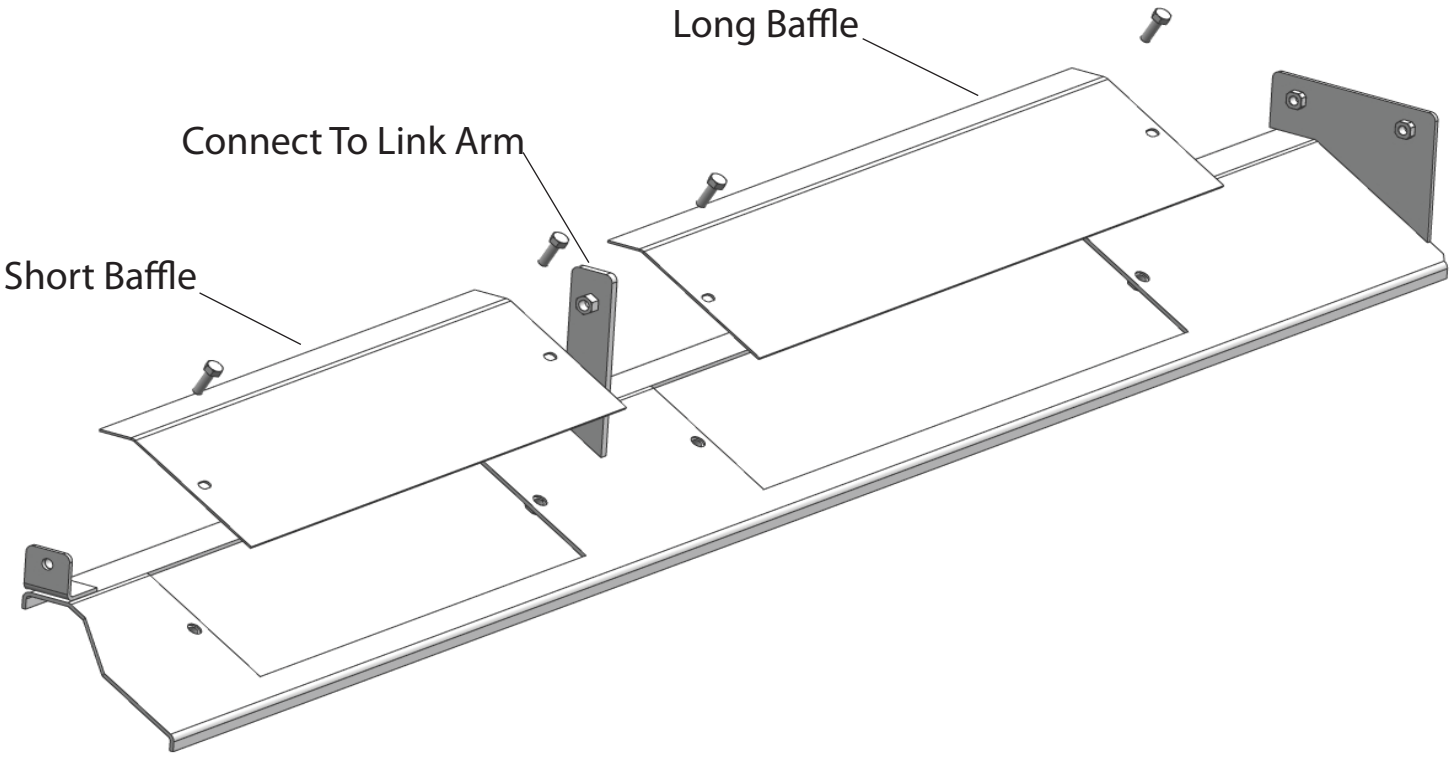

Troubleshooting

Whenever service is necessary, your local SnowEx Dealer knows your Spreader best. Take your Spreader to your local dealer for any maintenance or service needs on your unit. If this is not possible, the Troubleshooting Guide below may assist you in identifying the problem.

Warning: First read all warning instructions and safety messages before servicing your spreader.

Preliminary Checks
- Be sure all electrical connections are tight and clean.
- Be sure nothing is jammed in the hopper.
- Be sure that all hydraulic connections are properly connected.

PROBLEM	POSSIBLE CAUSE	SOLUTION
Motor doesn't run.	Loose hose connection.	Check all connections.
	Low fluid or pump malfunction.	Fill resevoir or replace pump
Material not flowing from hopper.	Empty hopper.	Fill hopper.
	Wet material.	Replace with dry material.
	Frozen or coarse material.	Replace material.
	Spinner not turning.	Check drive assembly.
	Auger coupling disengaged	Realign and tighten all set screws.
	Vibrator not working.	Check electrical connections.

© Trynex International 2008 L1215

V-Maxx 8500H/9500H/2400H Material Flow

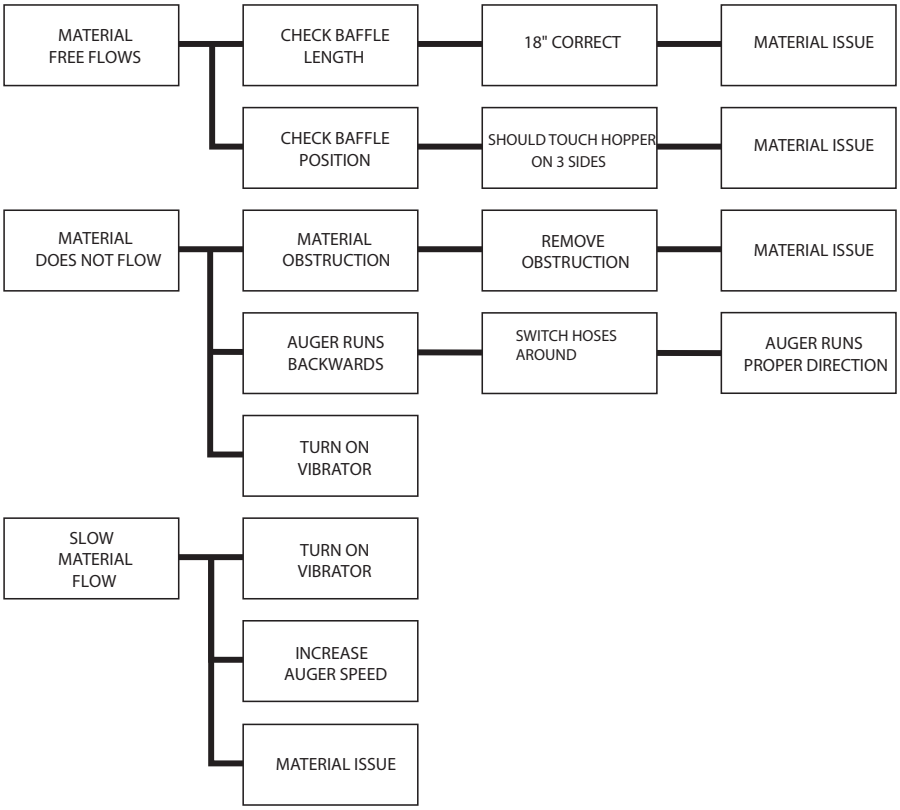

- **WARNING** – When servicing is necessary, perform it in a protected area. Do not use power tools in rain or snow because of
- **DANGER** – of electrical shock or injury. Keep area well lighted. Use proper tools. Keep the area of service clean to help avoid accidents.
- **WARNING** – Disconnect electricity to spreader before servicing.
- **CAUTION** – There are no serviceable parts in the motor/transmission assembly. Any attempt to service will void warranty.
- **CAUTION** – When replacing parts use only original manufacturer's parts. Failure to do so will void warranty.
- Use diaelectric grease on all electrical connections to prevent corrosion at the beginning and end of the season and each time power plugs are disconnected.
- Gently wash unit after each use to prevent material build-up and corrosion.
- **CAUTION** – When pressure washing motor enclosure area stay at least 36" away from all electrical items.
- Paint or oil all bare metal surfaces at the end of the season.
- Apply small amount of light oil to latches as needed.
- Grease bearings after every 20 hours use.
- After first use, tighten all nuts and bolts on spreader and mount.
- WARNING: Never remove spreader with material in hopper.

© Trynex International 2008 L1215

Determining Vehicle Payload

Material Type	Example: Coarse Salt – Dry				
Equipment installed when vehicle was weighed	V-Maxx 8500 H				
Front Gross Axle Weight Rating (RGAWR)					
Rear Vehicle Weight Rating (GVWR) (lb.)	8600				
Gross Vehicle Weight (GVW) (lb.) (empty)	– 6500	–	–	–	–
Payload Available (lb.)	= 2100	=	=	=	=
Material Weight (lb./cu. yd.)	÷ 1431	÷	÷	÷	÷
Maximum Volume (cu. yd.)	= 1.47	=	=	=	=
Maximum Height (approximate) (in.)	24"				
Loaded Front Gross Axle Weight (FGAW) (lb.)					
Loaded Rear Gross Axle Weight (RGAW) (lb.)					
Loaded Gross Vehicle Weight (GVW) (lb.)					

Torque Chart

When tightening fasteners, refer to the Torque Chart below for the recommended fastener torque values.

Recommended Fastener Torque Chart (ft.-lb.)

SIZE	SAE Grade 2	SAE Grade 5	SAE Grade 8
1/4-20	6	9	13
5/16-18	11	18	28
3/8-16	19	31	46
3/8-24	24	46	68
7/16-14	30	50	75
1/2-13	45	75	115
9/16-12	66	110	165
5/8-11	93	150	225
3/4-10	150	250	370
7/8-9	202	378	591
1-8	300	583	893

Metric Grade 8.8 (ft.-lb.)

SIZE	TORQUE	SIZE	TORQUE
M 6	7	M 12	60
M 8	17	M 14	95
M 10	35	M 16	155

These torque values apply to mount assembly fasteners except those noted in the instruction.

Material Weights

Refer to the table below for the weight per cubic yard of common spreading materials.

MATERIAL	WEIGHT (lb. per cubic yard)
Fine Salt – Dry	2,025
Coarse Salt – Dry	1,431
Sand/Salt Mix – Dry (50/50)	2,700
Cinders	1,080

Maximum working PSI _____ 2000

Type_____ Low Speed High Torque, 4 Bolt Mount 1" Keyed Shaft

Auger Motor Size_____ 165 cc Per Revolution

Spinner Motor Size_____ 45cc per revolution

Recommended Oil_____ Hydraulic SAE 10 Non-Foaming

Recommended Filter_____ Hydraulic 25 Micron Rating

Frequency of Service_____ Initial 50 Hours of Service/250 Hours Thereafter/Min Once Per Season

© Trynex International 2008 L1215

THIS PAGE INTENTIONALY LEFT BLANK

Limited Warranty

SnowEx products are warranted for a period of two years from the date of purchase against defects in material or workmanship under normal use and service, subject to limitations detailed below. Warranty period of two years begins on the date of purchase by the original retail user.

The WARRANTY REGISTRATION CARD must be returned to the manufacturer for this warranty to become effective. This warranty applies to the original retail purchaser only. This warranty does not cover damages caused by improper installation, misuse, lack of proper maintenance, alterations or repairs made by anyone other than authorized Trynex dealers or Trynex personnel. Due to the corrosive properties of the materials dispensed by spreaders, Trynex does not warrant against damage caused by corrosion. Warranty claims by the user must be made to the dealer from where the product was purchased, unless otherwise authorized by Trynex. Trynex reserves the right to determine if any part is defective and to repair or replace such parts as it elects. This warranty does not cover shipping costs of defective parts to or from the dealer.

LIMITATION OF LIABILITY

Neither Trynex, nor any company affiliated with it, makes any warranties, representations for promise as to the performance or quality other that what is herein contained. The liability of Trynex to the purchaser for damages arising out of the manufacture, sale, delivery, use or resale of this spreader shall be limited to and shall not exceed the costs of repair or replacement of defective parts. Trynex shall not be liable for loss of use, inconvenience or any other incidental, indirect or consequential damages, so the above limitations on incidental or consequential damages may not apply to you.

NO DEALER HAS AUTHORITY TO MAKE ANY REPRESENTATION OR PROMISE ON BEHALF OF TRYNEX INTERNATIONAL, OR TO ALTER OR MODIFY THE TERMS OR LIMITATIONS OF THIS WARRANTY IN ANY WAY.

© Trynex International 2008 L1215

Warranty Registration and Customer Survey

SnowEx®

To initiate the warranty on your new SnowEx spreader and assure prompt warranty service, please complete the following warranty registration and customer survey, sign and mail it back to the factory within 30 days of purchase.

1) Date of Purchase: _____

2) Name: _____

Address: _____

_____

Phone: _____

3) SnowEx Model Purchased: _____ Serial Number: _____

4) Is this your first Trynex Spreader? ❑ Yes ❑ No

5) What type of vehicle are you using with your Spreader?

Make _____ Model _____ Year _____

6) What type of material are you using in your spreader? _____

7) SnowEx Dealer Name: _____

SnowEx Dealer Address: _____

_____

SnowEx Dealer Phone: _____

8) Does your Trynex Dealer stock Trynex replacement Parts? ❑ Yes ❑ No ❑ I don't know

9) Do you feel your Trynex Dealer sold you the correct product for your needs/application? ❑ Yes ❑ No

10) How would you rate your overall satisfaction with your SnowEx Dealer?	❑ Very Satisfied	❑ Satisfied	❑ Somewhat Satisfied	❑ Somewhat Dissatisfied	❑ Dissatisfied	❑ Very Dissatisfied
11) How would you rate your overall satisfaction with your SnowEx Product?	❑ Very Satisfied	❑ Satisfied	❑ Somewhat Satisfied	❑ Somewhat Dissatisfied	❑ Dissatisfied	❑ Very Dissatisfied

12) Would you purchase another Trynex Product? ❑ Yes ❑ No

13) If you would like to receive E-Mail ALERTS for new products, bulletins or special promotions please supply address : _____

14) Please use the space below to convey your comments and/or suggestions.

_____

_____

_____

_____

NOTE: I have read the owner's manual and all safety precautions and I understand that this equipment could be dangerous if not operated with care and under the proper conditions.

15) Owner's signature: X _____

PLEASE FOLD AND SEAL WITH TRANSPARENT TAPE BEFORE MAILING.

© Trynex International 2008

Warm Up to SNOWEX®

with a

FREE

Winter Hat!

Simply Fill Out Your Warranty Registration and Return It to the Factory!

From:

_____

_____

_____

Postage Required
Post Office will not deliver without proper postage.

TRYNEX® INTERNATIONAL

531 Ajax Drive
Madison Heights, MI 48071

Rev. 01