This Manual Must Be Read Before Operating The Equipment

Owner / Operator's Manual

SnowEx®

Spreaders for Snow & Ice Control

FOR MODEL

7500

TrynEx® INTERNATIONAL

Warren, Michigan 48089

800-725-8377

CUSTOMER COPY

Protected by the following patents, #6,089,478, #6,088,865, #Des.425,915 and other pending U.S. and foreign patent applications.

© Trynex International 2008 L1184 Rev. 07

Table of Contents

Introduction 3
General Information and Registration 4
Safety Information 5-7
Spreader Assembly and Exploded Views 8-17
Wiring Instructions 18
Electrical System Information 19-22
Spreader Mounting System 23-26
Spreader Operating Information 27-30
Troubleshooting Information 31-33
Spreader Maintenance 34
Determine Vehicle Payload Chart 35
Blank Pages 36-37
Warranty 38-39

© Trynex International 2008

This manual has been designed for your help. It will assist you and instruct you on the proper set-up, installation and use of this spreader.
Refer to the table of contents for an outline of this manual.

We require that you read and understand the contents of this manual completely (especially all safety information) before attempting any procedure contained herein.

THIS SIGN SHOULD ALERT YOU:
The Society of Automotive Engineers has adopted this SAFETY ALERT SYMBOL to pinpoint characteristics that, if NOT carefully followed, can create a safety hazard. When you see this symbol in this manual or on the machine itself, BE ALERT! Your personal safety and the safety of others is involved.

Defined below are the SAFETY ALERT messages and how they will appear in this manual:

DANGER

(RED)
Information that, if not carefully followed,
can cause death!

WARNING

(ORANGE)
Information that, if not carefully followed,
can cause serious personal injury or death!

CAUTION

(YELLOW)
Information that, if not carefully followed,
can cause minor injury or damage to equipment.

General Information

CONGRATULATIONS!

The spreader you have purchased is an example of snow and ice control technology at its finest! Your spreader's, self-contained design is a trademark of all Snowex products. Here's why...

SIMPLICITY: Fewer moving parts manufactured of higher quality means minimal maintenance for your SnowEx spreader.

RELIABILITY: High impact linear low density polyethelyne hopper, state-of-the-art electronic dual variable speed control, custom engineered powder coated frame, maximum torque 12 volt motor coupled to a custom engineered transmission found only on SnowEx products.

VERSATILITY: Multi-use capabilities allows spreading of a variety of materials for snow and ice control.

WARRANTY: Two years from date of installation.

The benefits you are about to recognize are that of time, money and effort.
We welcome you to the world of Snowex Performance.

Registration

Record the following information in this manual for quick reference.

Spreader Model Number _____

Spreader Serial Number_____ Controller Serial Number _____

Date of Purchase_____

Dealer Where Purchased _____

When ordering parts, the above information is necessary. This will help to insure that you receive the correct parts.

At the right is a diagram of the ID tag. This tag on the spreader is located on the frame.

SER. NO._____
TRYNEX INTERNATIONAL
Warren, MI 48089 (800) 725-8377

Please fill out the warranty card with all the necessary information to validate it. This will also give us a record so that any safety or service information can be communicated to you.

 © Trynex International 2008

DANGER **WARNING** **CAUTION**

Before attempting any procedure in this book, these safety instructions must be read and understood by all workers who have any part in the preparation or use of this equipment.

For your safety warning and information decals have been placed on this product to remind the operator of safety precautions. If anything happens to mark or destroy the decals, please request new ones from Snowex.

WARNING Unit must be strapped down and locked into position before operating vehicle.

DANGER Never exceed the Gross Vehicle Weight Rating of vehicle. Failure to do so may limit a vehicles handling characteristics.

DANGER Never attempt to take a unit off a truck with material in it.

WARNING Never exceed 45 m.p.h. when loaded spreader is attached to vehicle. Braking distances may be increased and handling characteristics may be impaired at speeds above 45 m.p.h.

WARNING Never allow children to operate or climb on equipment.
Always check areas to be spread to be sure no hazardous conditions or substances are in the area.
Always inspect unit for defects: broken, worn or bent parts, weakened areas on spreader or mount.

WARNING Always shut off vehicle and power source before attempting to attach or detach or service spreader unit. Be sure vehicle/power source is properly braked or chocked.

WARNING Always keep hands, feet, and clothing away from power-driven parts. Remember it is the owner's responsibility to communicate information on safe usage and proper maintenance of all equipment.

WARNING Always make sure personnel are clear of areas of danger when using equipment. Maintain 60' distance from all bystanders when operating the spreader.

WARNING Inspect the unit periodically for defects. Parts that are broken, missing, or worn out must be replaced immediately. The unit, or any part of it should be altered without prior written permission from the manufacturer.

CAUTION Never use 7500 with foreign debris in the spreader. These units are designed to handle clean, free-flowing material. Note: Can not spread water softner salt.

© Trynex International 2008 L1184

WARNING Always inspect pins and latches whenever attaching or detaching spreader, and before traveling.

CAUTION Never leave material in hopper for long periods of time. Be aware that all ice melters are hygroscopic and will attract atmospheric moisture and harden up.

WARNING Remember, most accidents are preventable and caused by human error. Exercising of care and precautions must be observed to prevent the possibility of injury to operator or others!

WARNING Never operate equipment when under the influence of alcohol, drugs, or medication that might alter your judgment and/or reaction time.

WARNING Before working with the spreader, secure all loose fitting clothing and unrestrained hair.

WARNING Always wear safety glasses with side shields when servicing spreader. Failure to do this could result in serious injury to the eyes.

 © Trynex International 2008

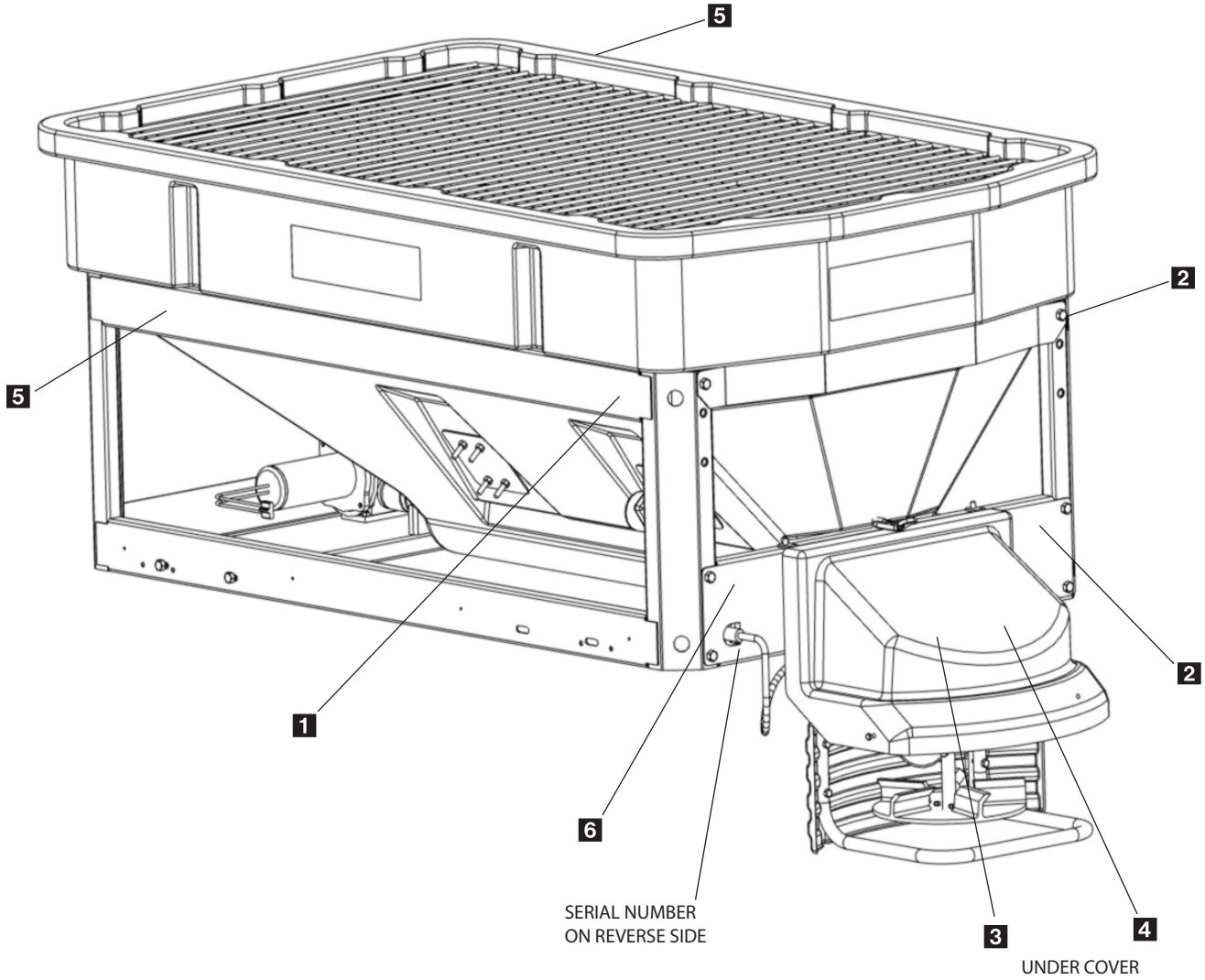

1 D 6546

2 D 6859

3 D 6545

4 D 6544

5 D 6335

6 D 6548

Component Assembly Views

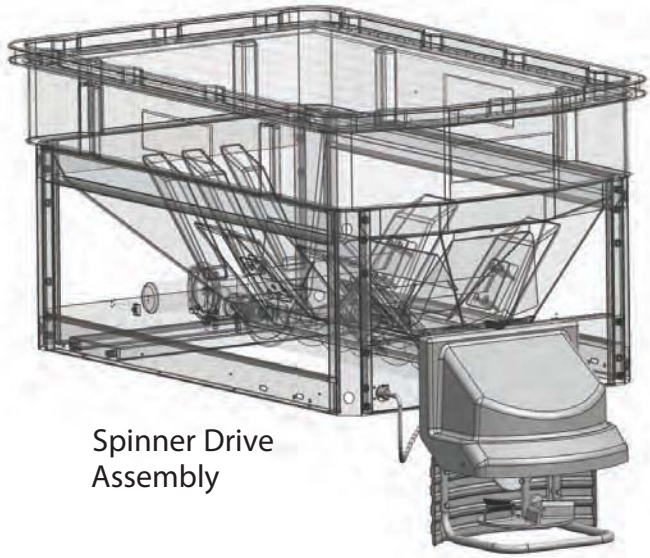

Spinner Drive Assembly

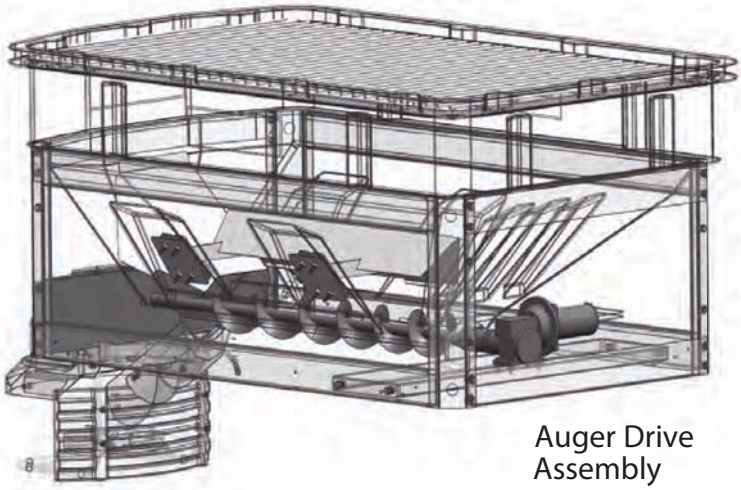

Auger Drive Assembly

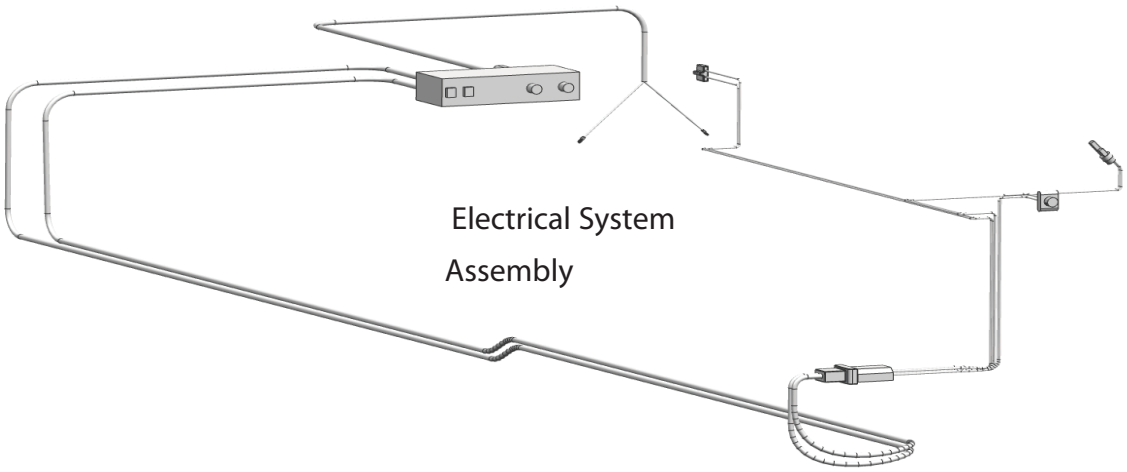

Electrical System Assembly

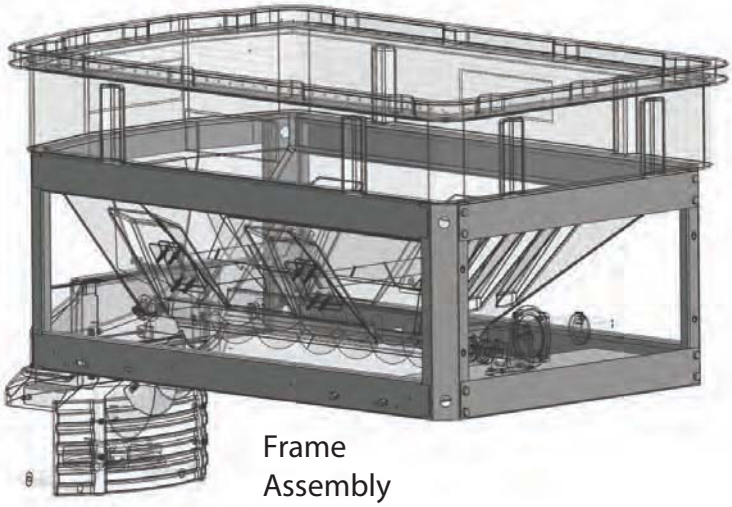

Frame Assembly

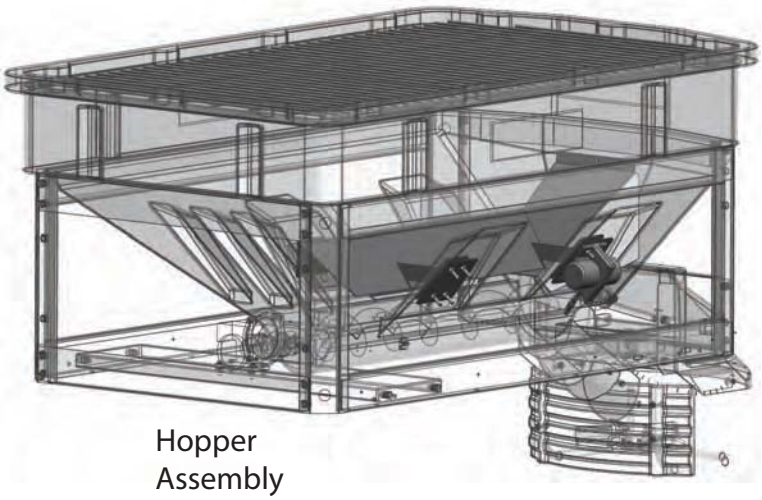

Hopper Assembly

L184 © Trynex International 2008

Side and Bottom Views

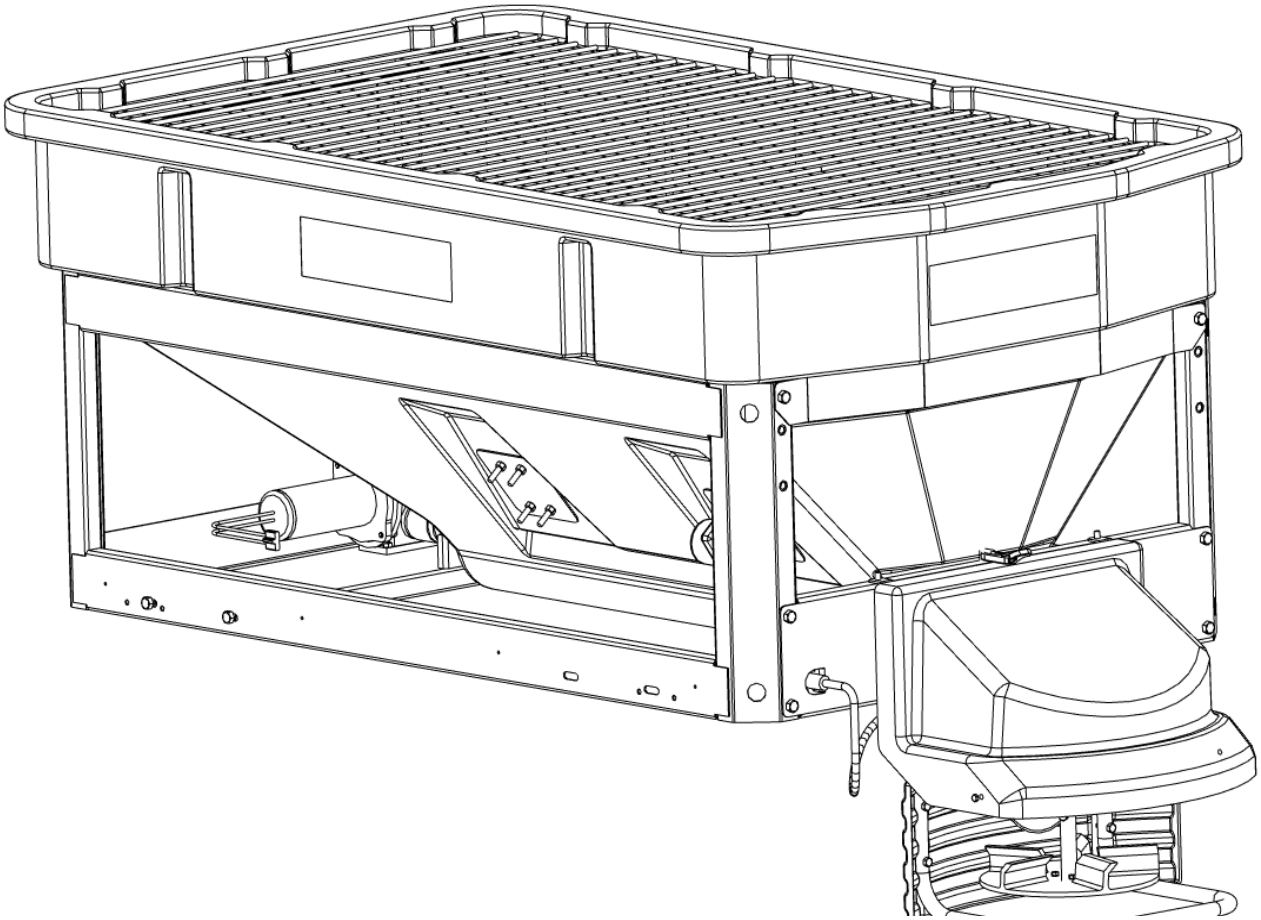

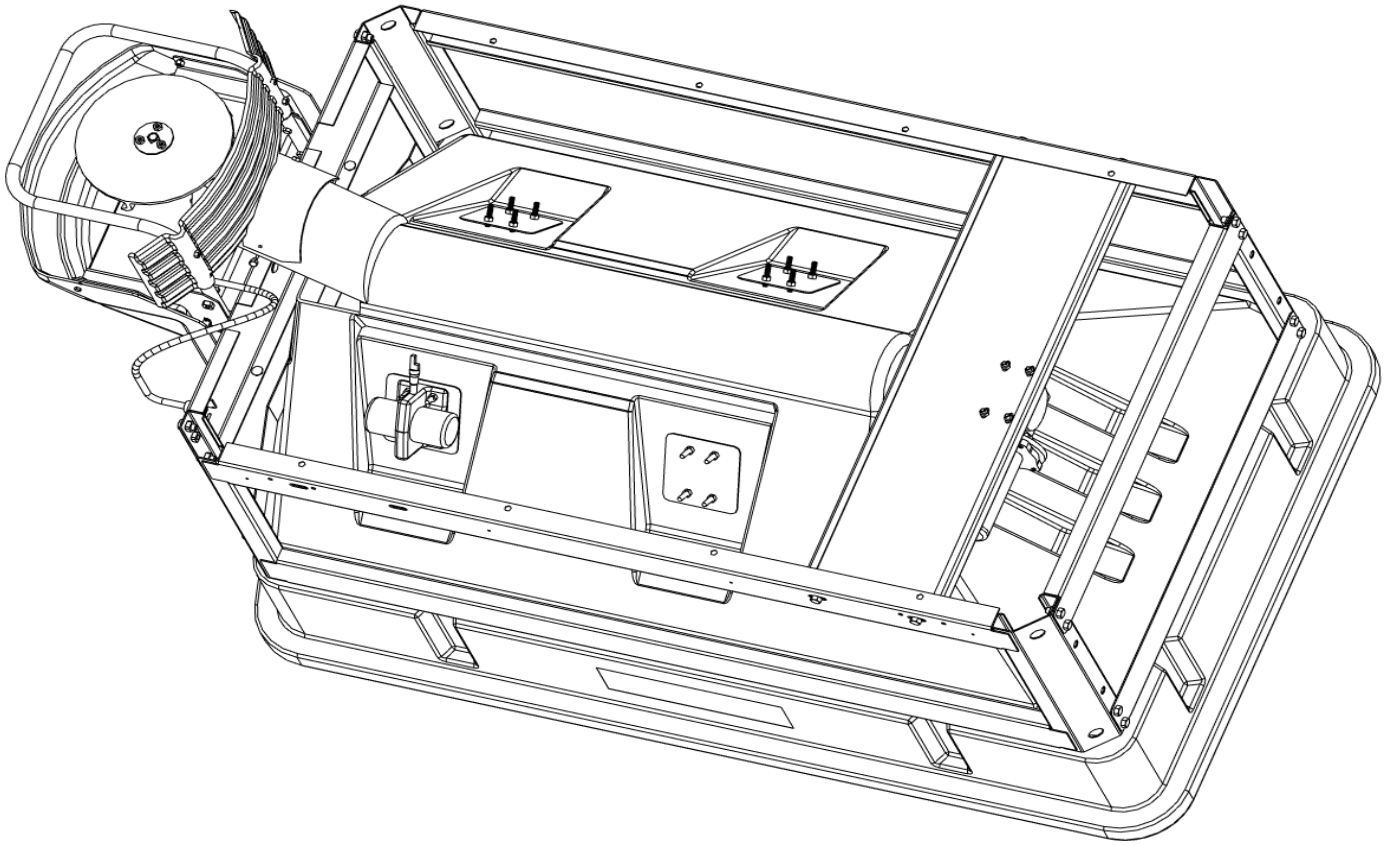

7500 Auger Drive Assembly

Parts Breakdown

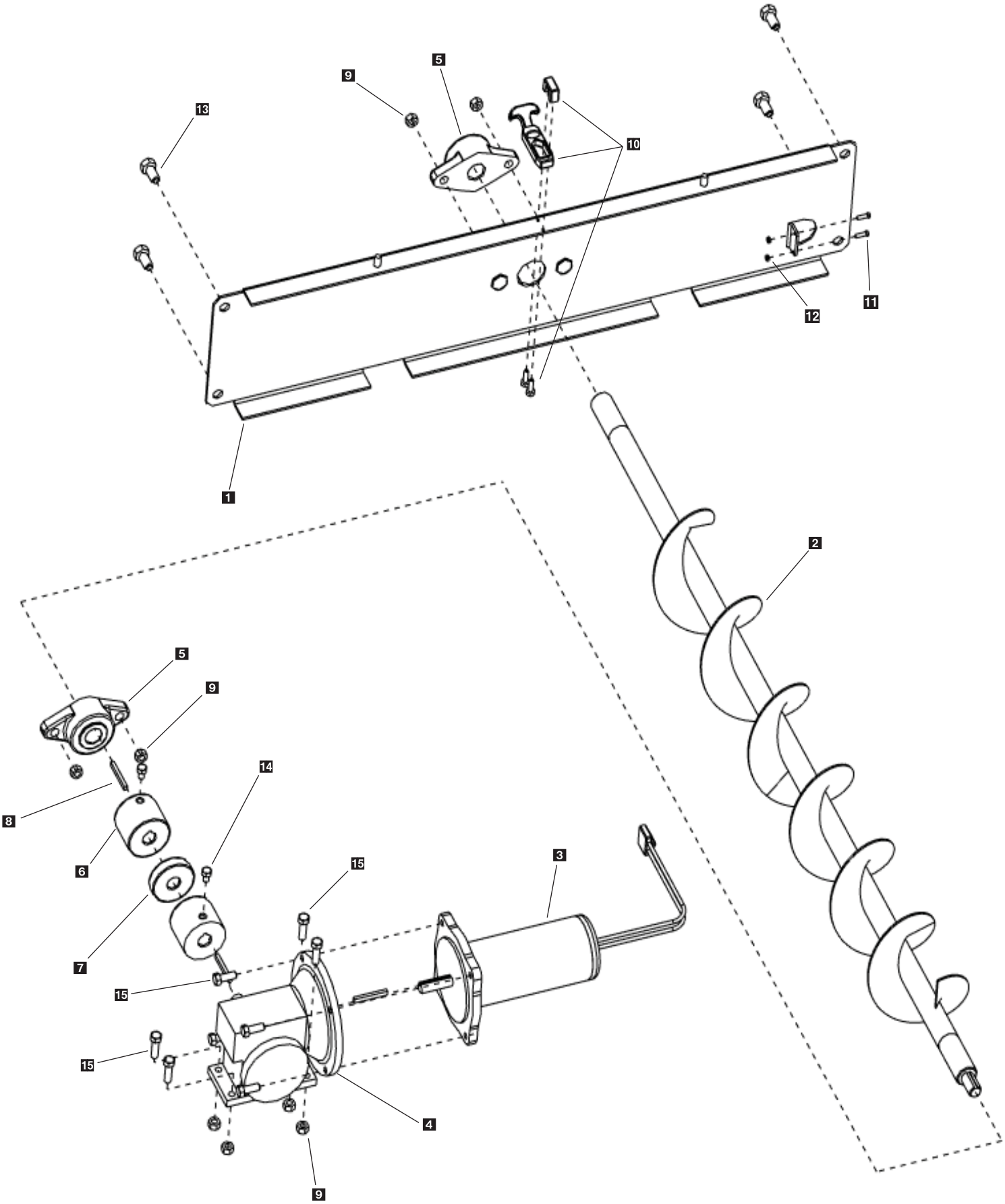

 © Trynex International 2008

7500 Auger Drive Assembly

Parts Breakdown

Key	Part No.	Description	Qty.
1	D5514	Rear Spinner Drive Mount	1
2	D5520	48" Auger Weldment	1
3	D5522	Auger Motor	1
4	D6826	80:1 Auger Transmission	1
5	D5527	Auger Bearing	2
6	D5532	Auger Coupling Hub 1"	2
7	D5533	Auger Coupling Spyder 1"	1
8	D6873	3/16" Keyway Stock	3
9	D5535	1/2-13 Serrated Flange Nut	8
10	D6105	Rubber Latch Assembly	1
11	D6159	#10-32 x 2" Hex Head Machine Screw	2
12	D6158	#10-32 Nylock Nut	2
13	D6528	1/2-13 x 1" Serrated Flange Bolt	4
14	NO PN#	Set Screw	2
15	D4122	3/8"-16 x 1-1/2" Hex Head	8

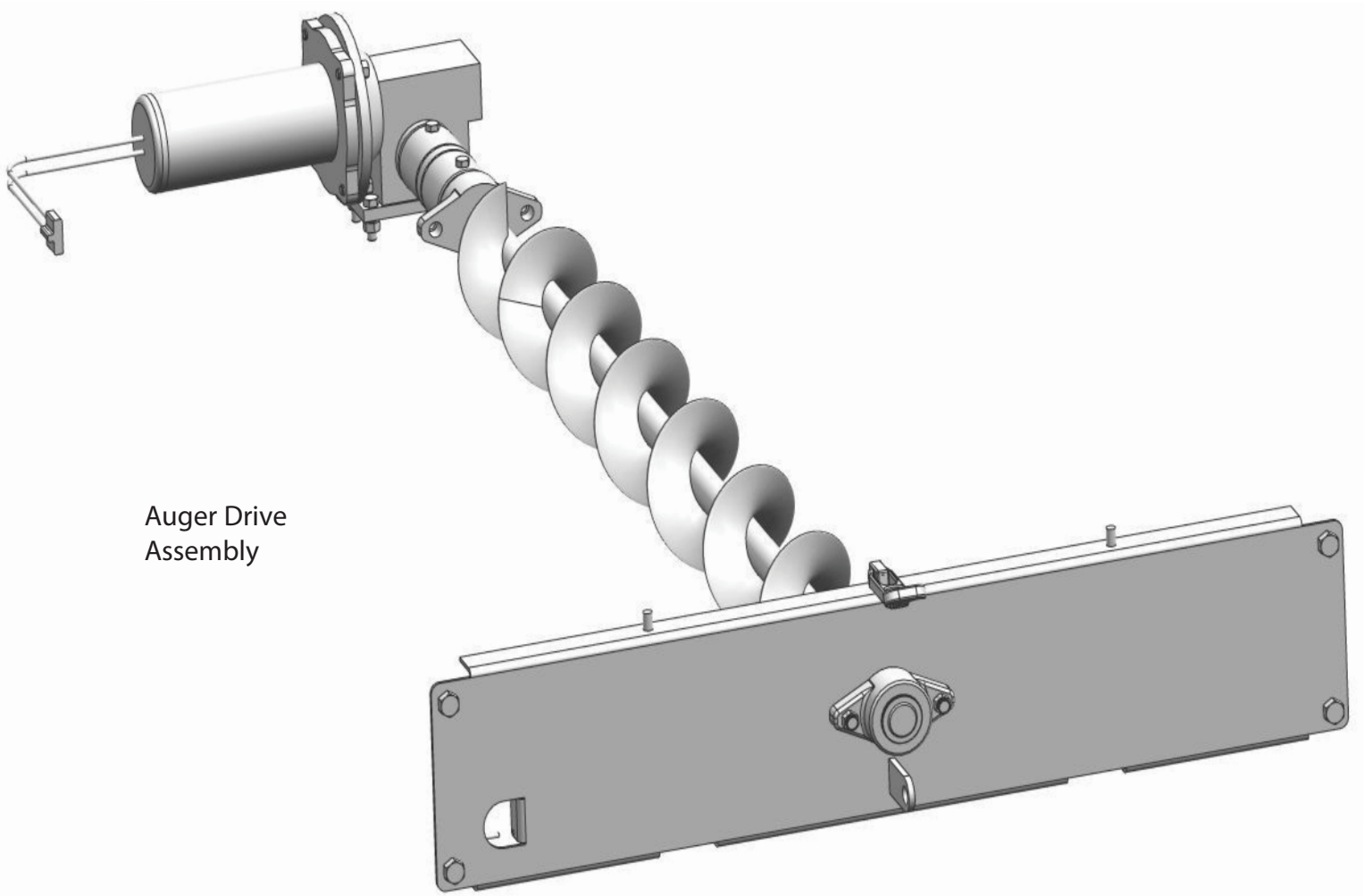

7500 Spinner Drive Assembly

Parts Breakdown

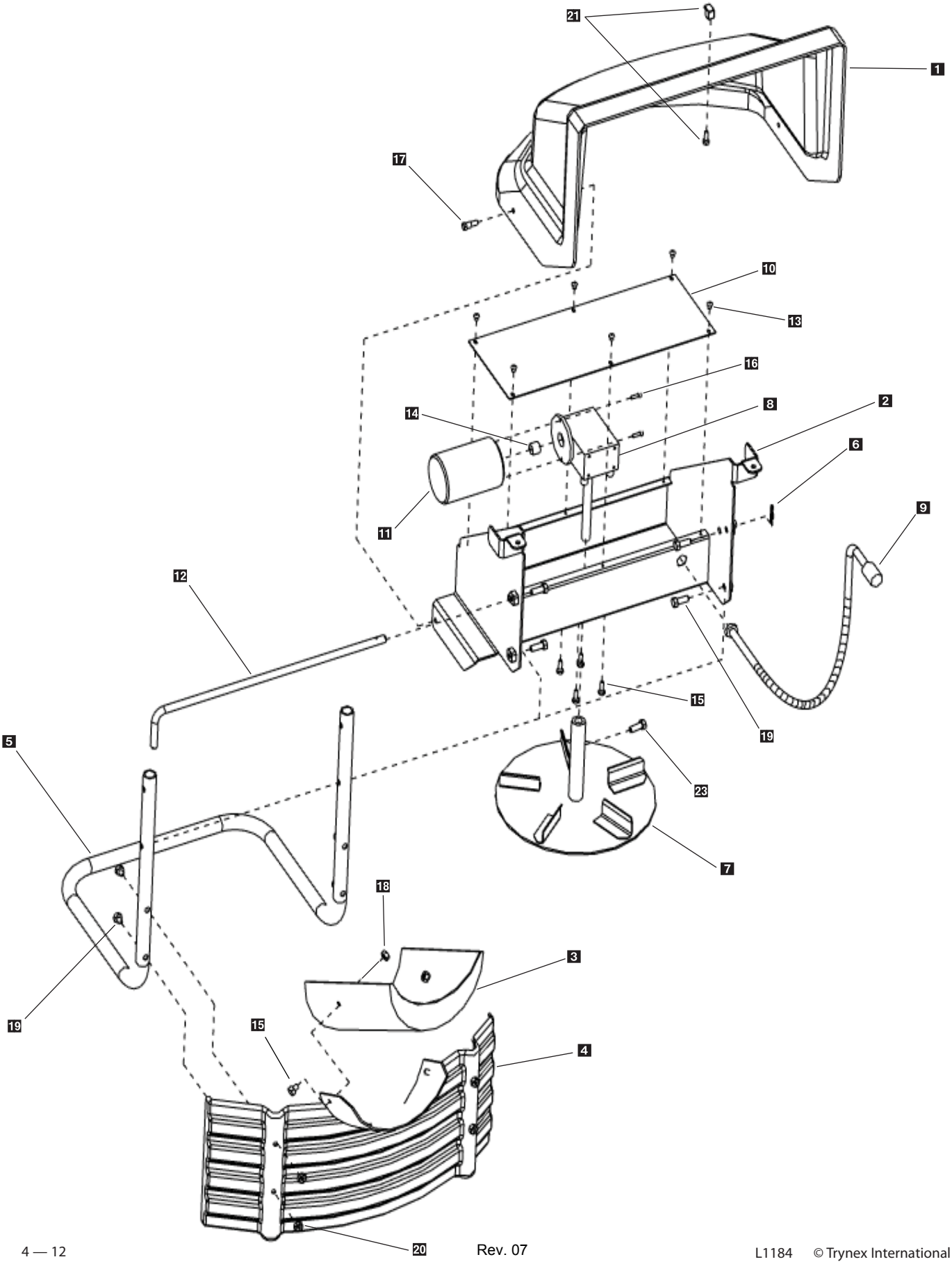

Rev. 07

 © Trynex International 2008

7500 Spinner Drive Assembly

Parts Breakdown

Key	Part No.	Description	Qty.
1	D5502	Spinner Hood	1
2	D5518	Spinner Enclosure	1
3	D6832	Plastic Chute	1
4	D6833	Plastic Deflector	1
5	D6820	Spinner Tube Guard	1
6	D4134	Hairpin Clip	1
7	D6516	Spinner Assembly	1
8	D6107	Spinner Transmission	1
9	D6162	Power Cord	1
10	D6819	Enclosure Cover	1
11	D6827	Spinner Motor	1
12	D6563	Drive Enclosure Pin	1
13	D6467	Enclosure Cover Fasteners	6
14	D6232	Motor Coupler	1
15	D6131	1/4-20 x 3/4 Stainless Hex Head Bolt	6
16	D6135	10-32 x 5/8 Cap Screw	2
17	D5536	3/8-5/16 Shoulder Bolt	2
18	D4289	1/4-20 Stainless Lock Nut	2
19	D6524	5/16-18 x 1-1/2" Hex Bolt	8
20	D6138	5/16-18 Nylock Nut	8
21	D6105	Latch Lock Assembly	1

Complete Drive Assembly
D-5509

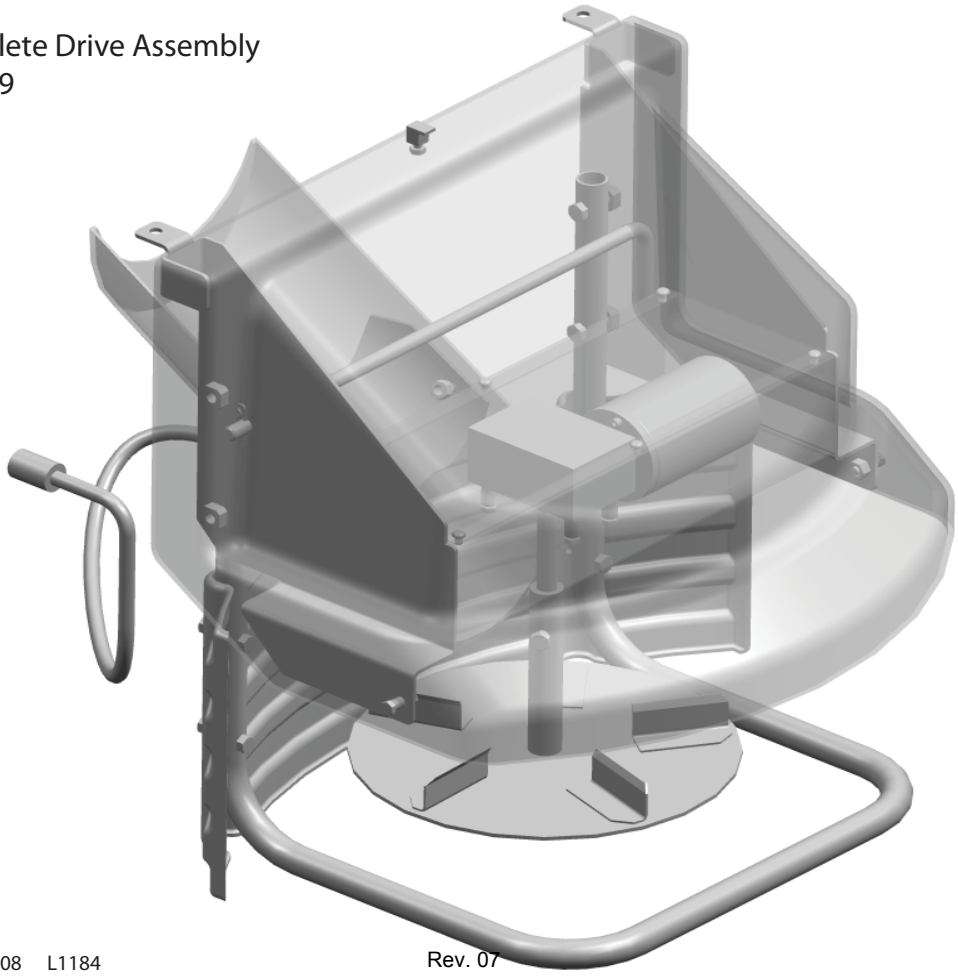

7500 Hopper Assembly

Parts Breakdown

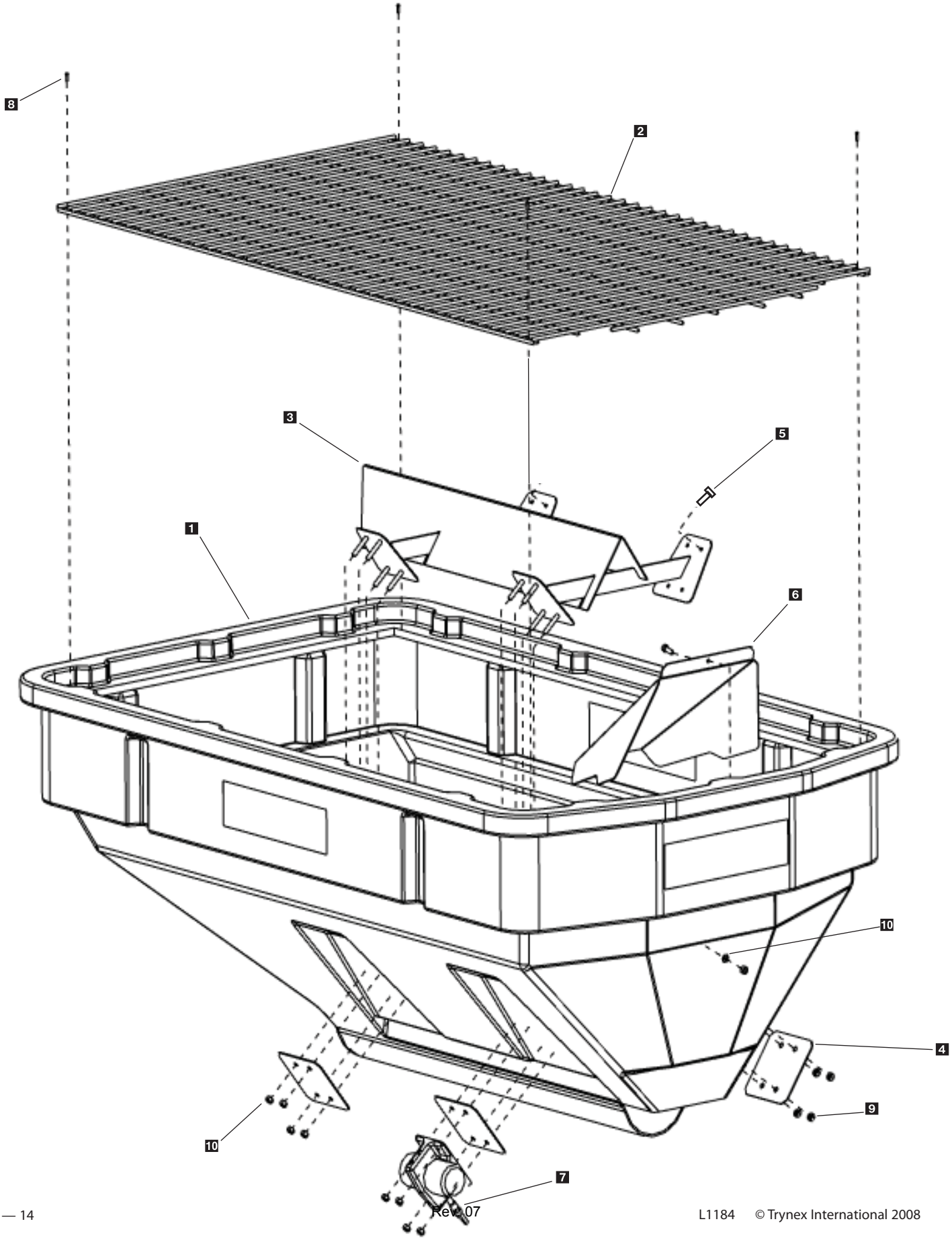

 © Trynex International 2008

7500 Hopper Assembly

Parts Breakdown

Key	Part No.	Description	Qty.
1	D 5500	7500 Hopper	1
2	D 5512	Top Screen	1
3	D 5510	Inverted-V Assembly	1
4	D 5508	Inverted-V Backing Plates	4
5	D 4121	3/8"-16 x 1" Hex Bolt	8
6	D 5517	Salt Discharge Baffle	1
7	D 6515	Heavy Duty Vibrator	1
8	D 6874	1/4" x 1-1/2" Self Drilling Screw	8
9	D 4124	3/8" lock Nut	8
10	D 4125	3/8" flat washer	1

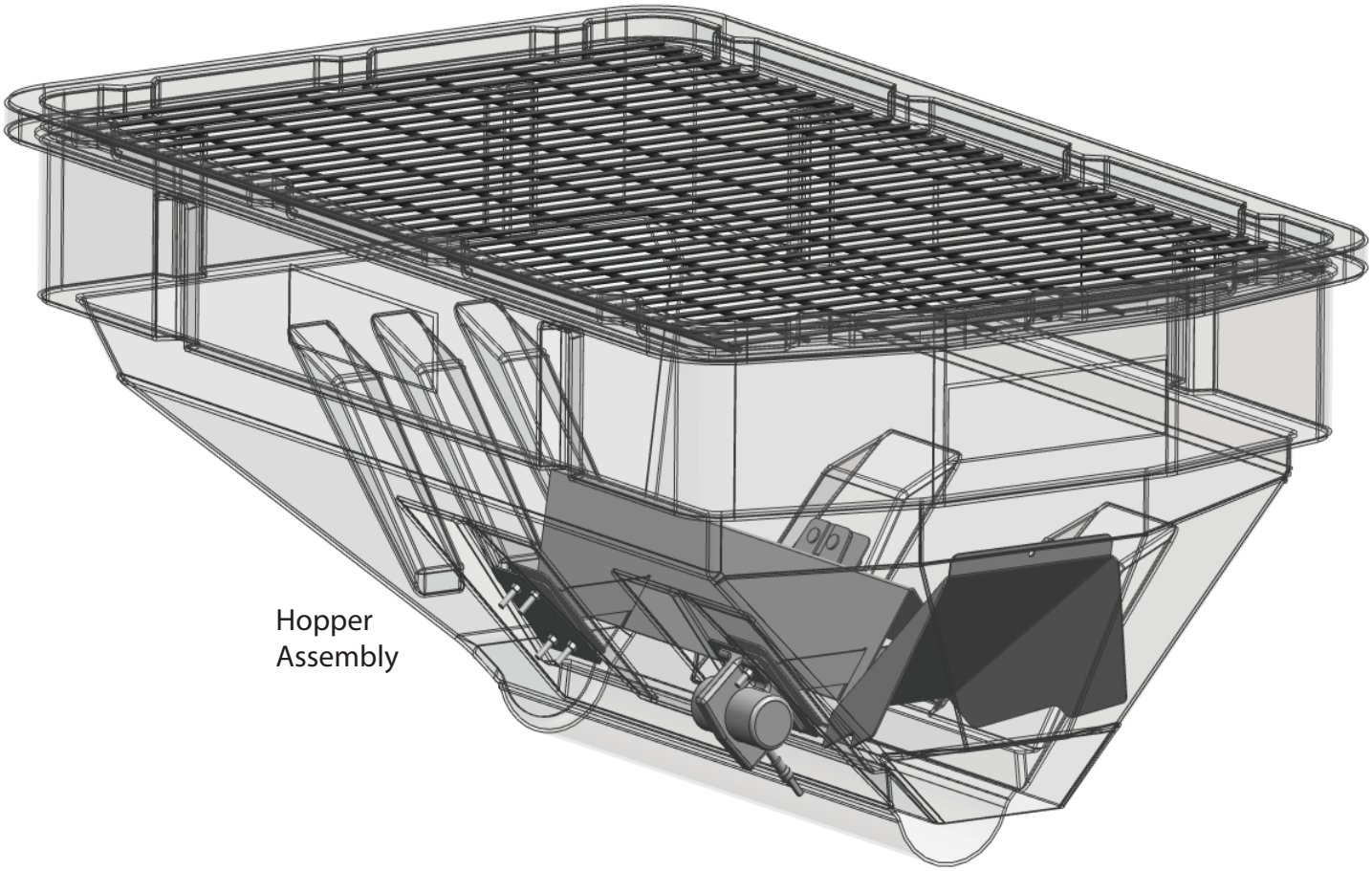

7500 Frame Assembly

Parts Breakdown

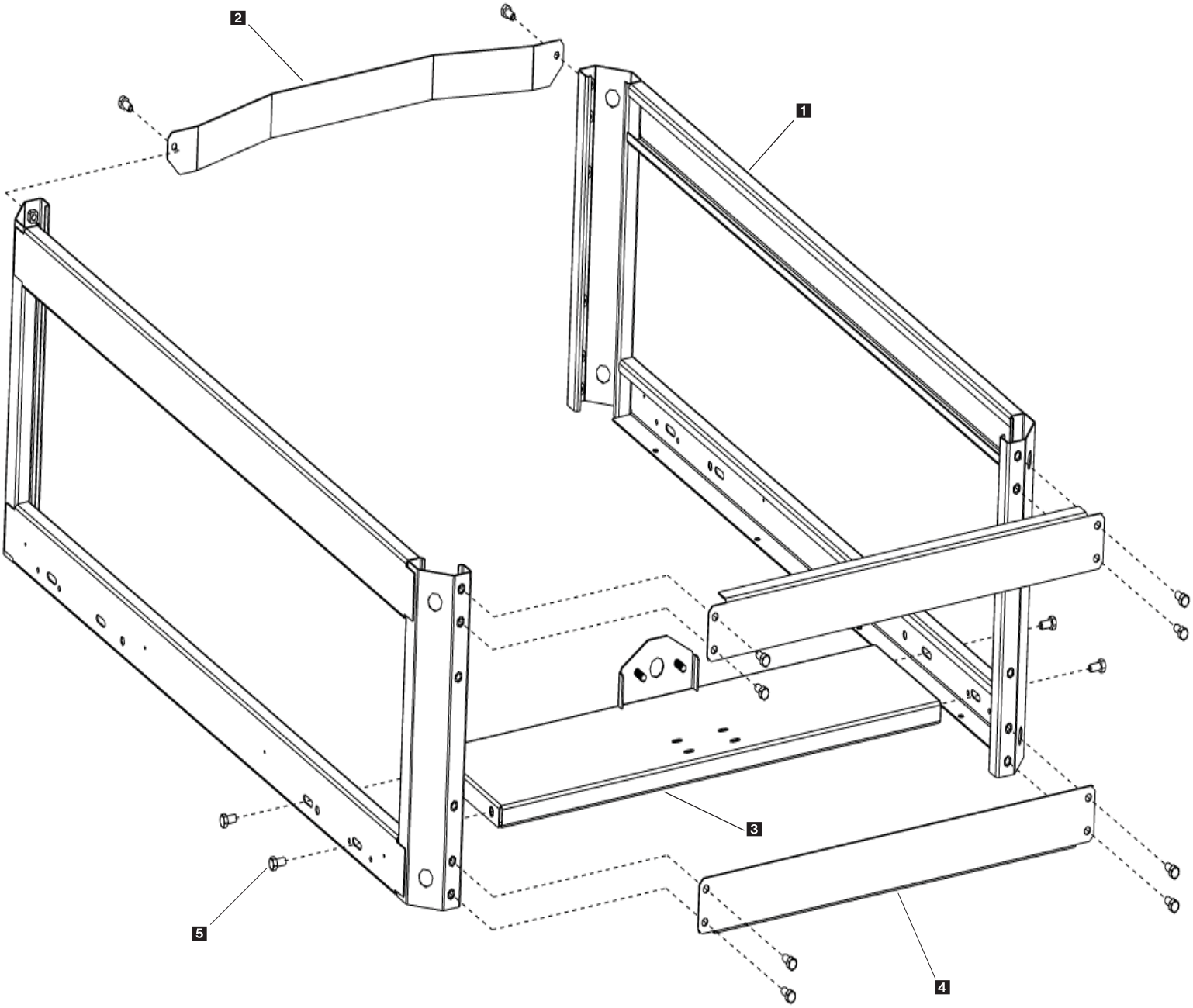

 © Trynex International 2008

7500 Frame Assembly

Parts Breakdown

Key	Part No.	Description	Qty.
1	D 5505	7500 Frame Weldment	2
2	D 5506	Rear Apron	1
3	D 5504	Auger Motor/Transmission Support	1
4	D 5507	Upper/Lower Front Facia	2
5	D 6528	1/2-13 x 1" Serrated Hex Head Bolt	14

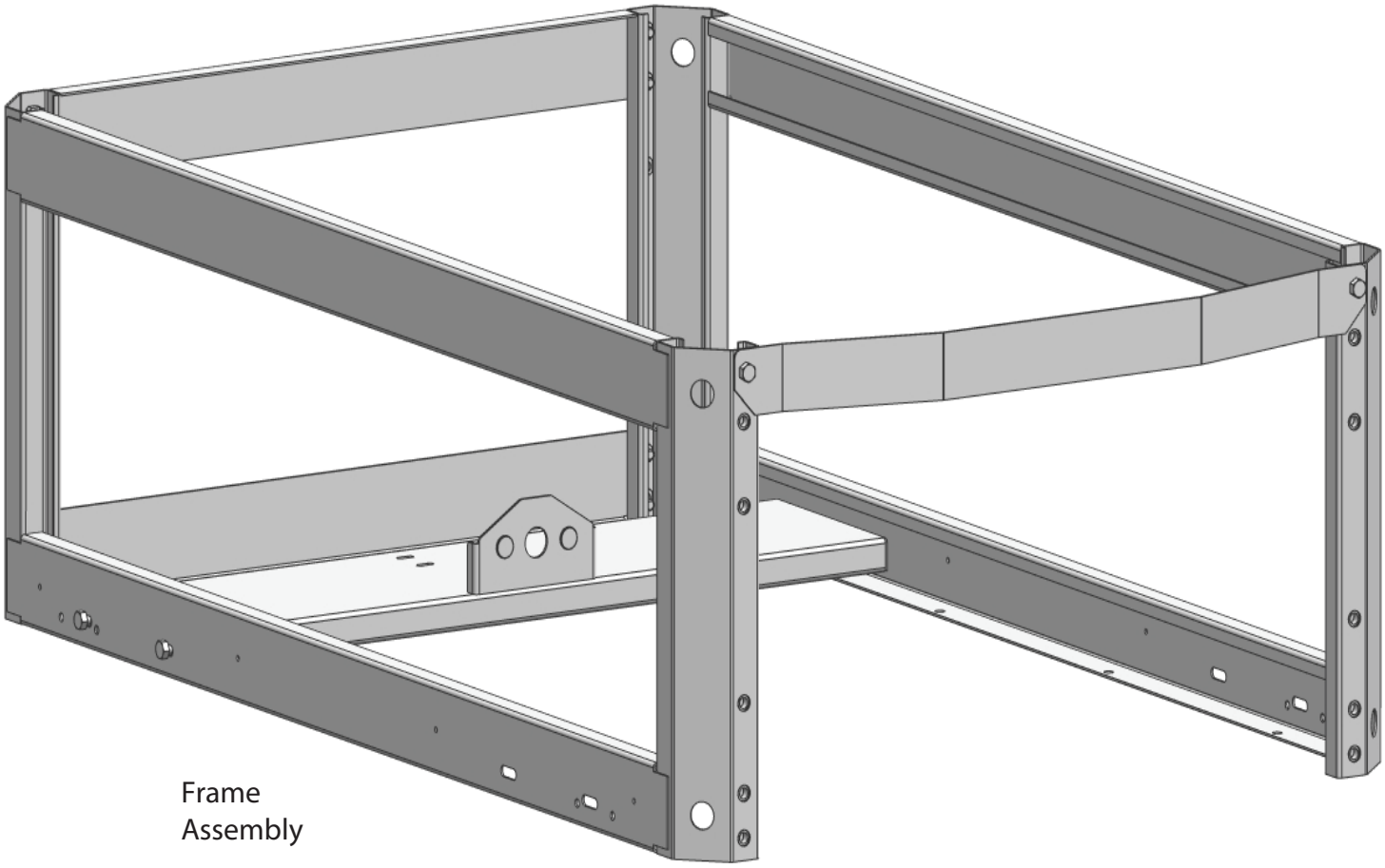

Vehicle Harness Wiring Instructions

Step 1: Take harness assembly and route from the rear of the vehicle to the front. Route harness along frame and attach to frame holes and frame supports. It is not recommended to attach to fuel or brake lines for obvious reasons. Do not route close to exhaust system or engine, even though Snowex uses high temperature wiring, it still could melt under extreme heat and short the spreader electrical system, as well as the vehicle electrical system.

Step 2: Mount rear plug on bumper using supplied bolts, locate towards the center of the bumper to reduce the amount of debris the tires will throw to the rear. Important: Apply a small amount of dielectric grease to the plug. Also try to mount so plug faces upward to help keep plugs tightly sealed.

Step 3: Secure harness from the rear to the front using heavy duty ty-wraps or frame clips along the frame and lighter duty ty-wraps everywhere else.

Step 4: Layout harness portion that connects to the battery along the fire wall and fender well. Do not connect power leads to battery yet. Drill a 3/4" hole in the fire wall, or use existing access hole, for the control portion of the harness and route connector and harness through hole. Be sure to check the area on the other side of the fire wall to make sure you are not going to drill into the vehicle harness or a control module. Generally you can drill on either side of the steering wheel for a good location.

Step 4A: The power harness from control box to battery will need to be routed from the inside of the cab to the battery – this results from the large high amperage connector. Route leads with lugs to battery — do not connect power at this time.

Step 5: Connect harness to the back of the controller and mount to a suitable location. NOTE: You may want to contact customer before mounting controller, some prefer not to have holes drilled into the dashboard. Ty-wrap loose controller harness and move to the engine compartment. Do not mount close to any heater vents.

Step 6: Connect power leads to the battery: Red + Positive, Black – Negative, always connect to the primary battery if using a dual battery system, secure loose loom to any other large or medium vehicle harness with medium duty ty-wraps this will secure wiring harness.

Step 7: Push the ON/OFF button on the controller to check for power, when that has been confirmed turn power **OFF**. The electrical portion of the installation is complete.

 © Trynex International 2008

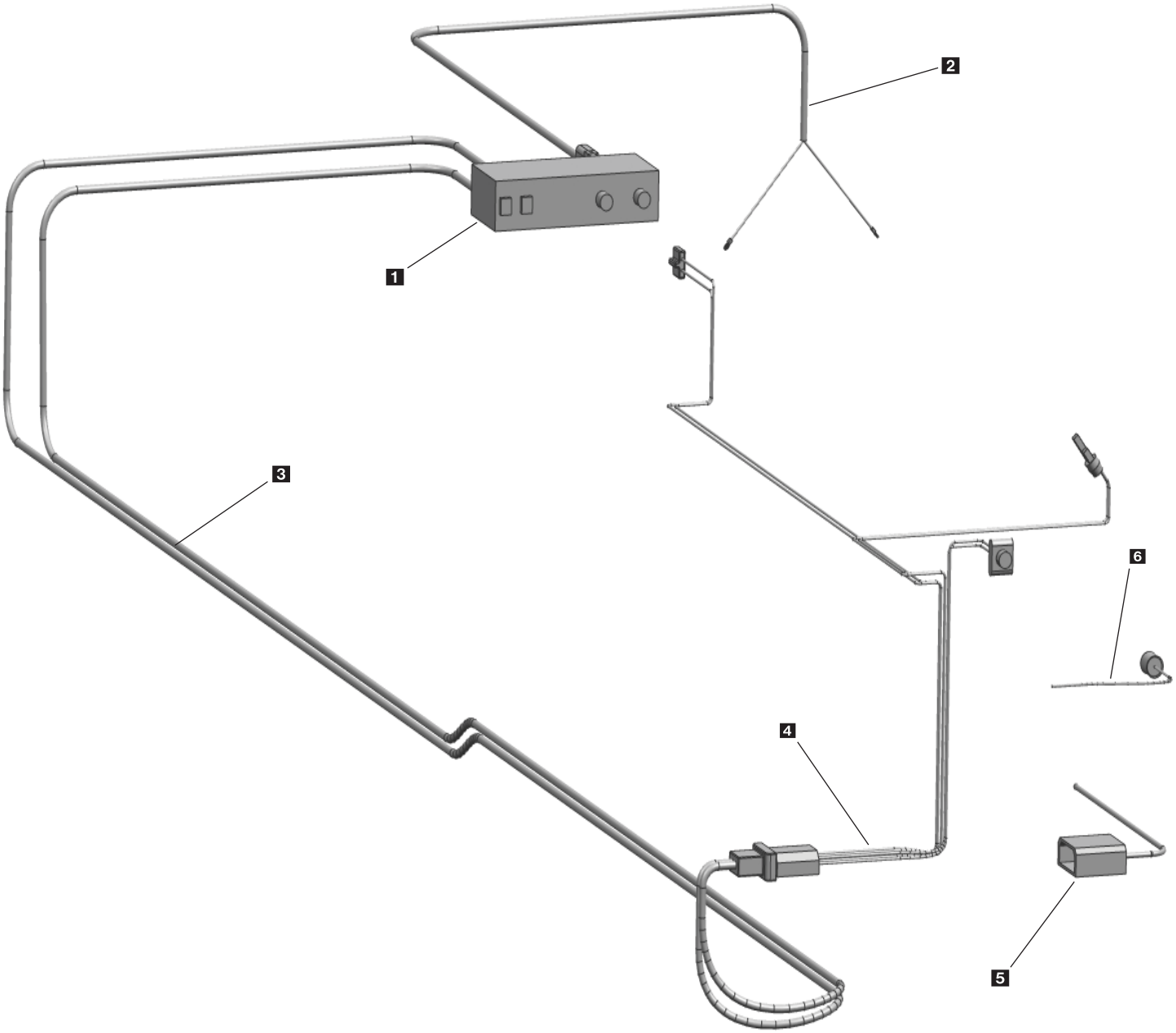

Key	Part No.	Description	Qty.
1	D 5525	Spreader Speed Control	1
2	D 6341	Control Power Harness	1
3	D 6322	Vehicle Harness	1
4	D 5524	Spreader Harness	1
5	D 6343	Vehicle Harness Dust Cap	1
6	D 6118	Spreader Spinner Plug Dust Cap	1

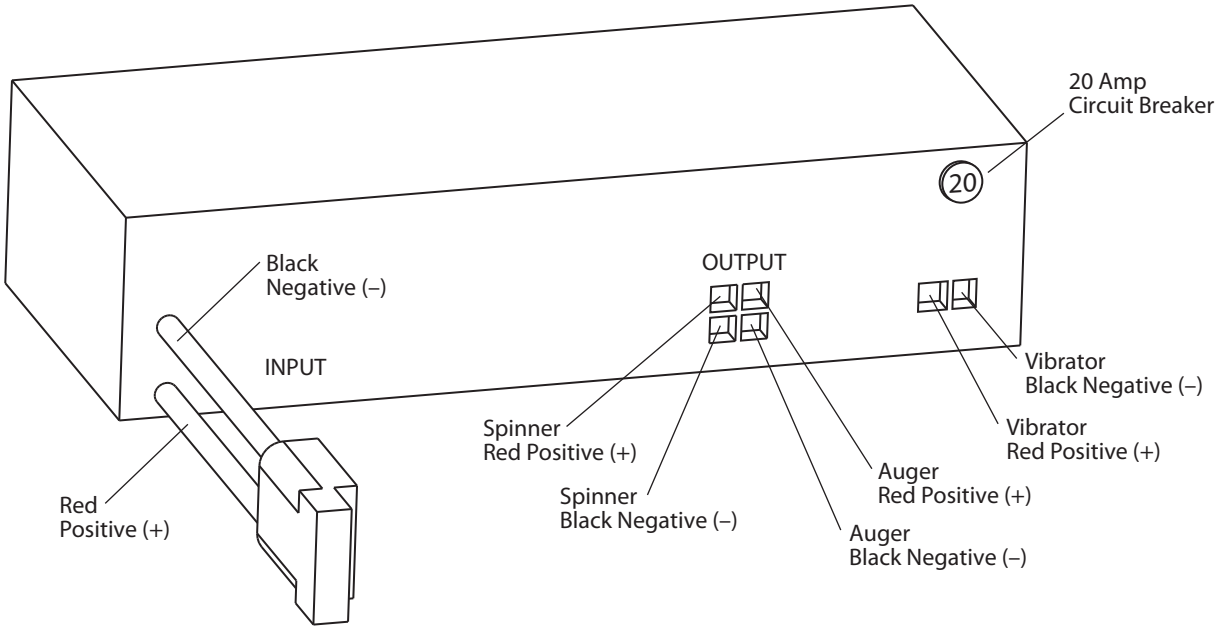

D6341 Control Power Cable

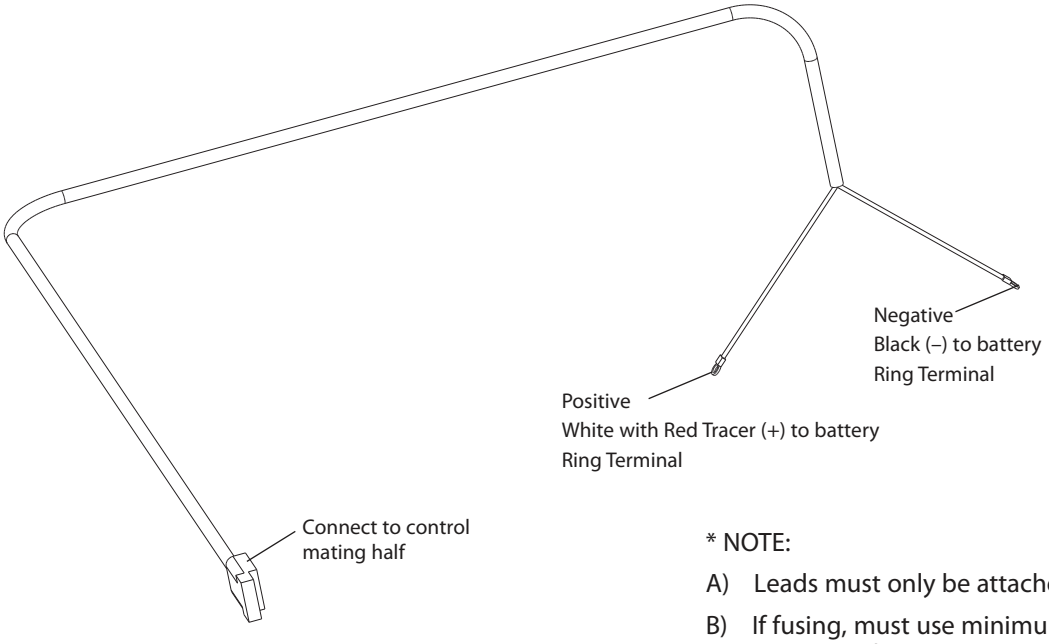

* NOTE:

A) Leads must only be attached to battery.

B) If fusing, must use minimum 60 Amp Maxi type fuse.

L1184 © Trynex International 2008

Circuit Diagram

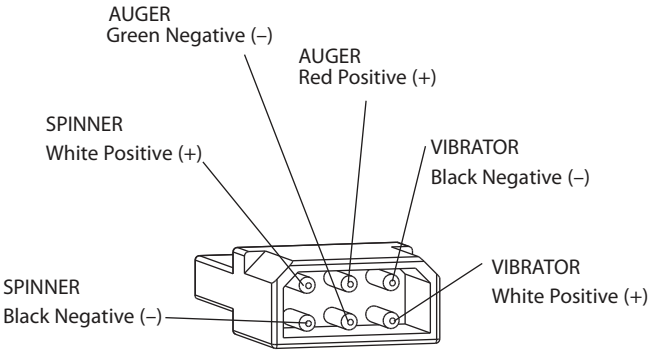

MAIN POWER PLUG
SPREADER

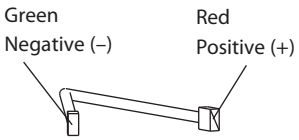

AUGER POWER
CONNECTION

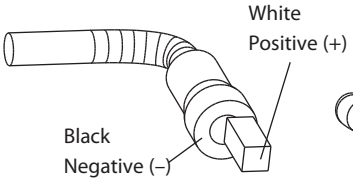

VIBRATOR
POWER PLUG

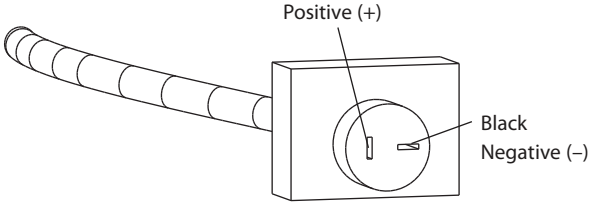

SPINNER
POWER PLUG

* NOTE: Plug has polarity reversed for proper motor rotation

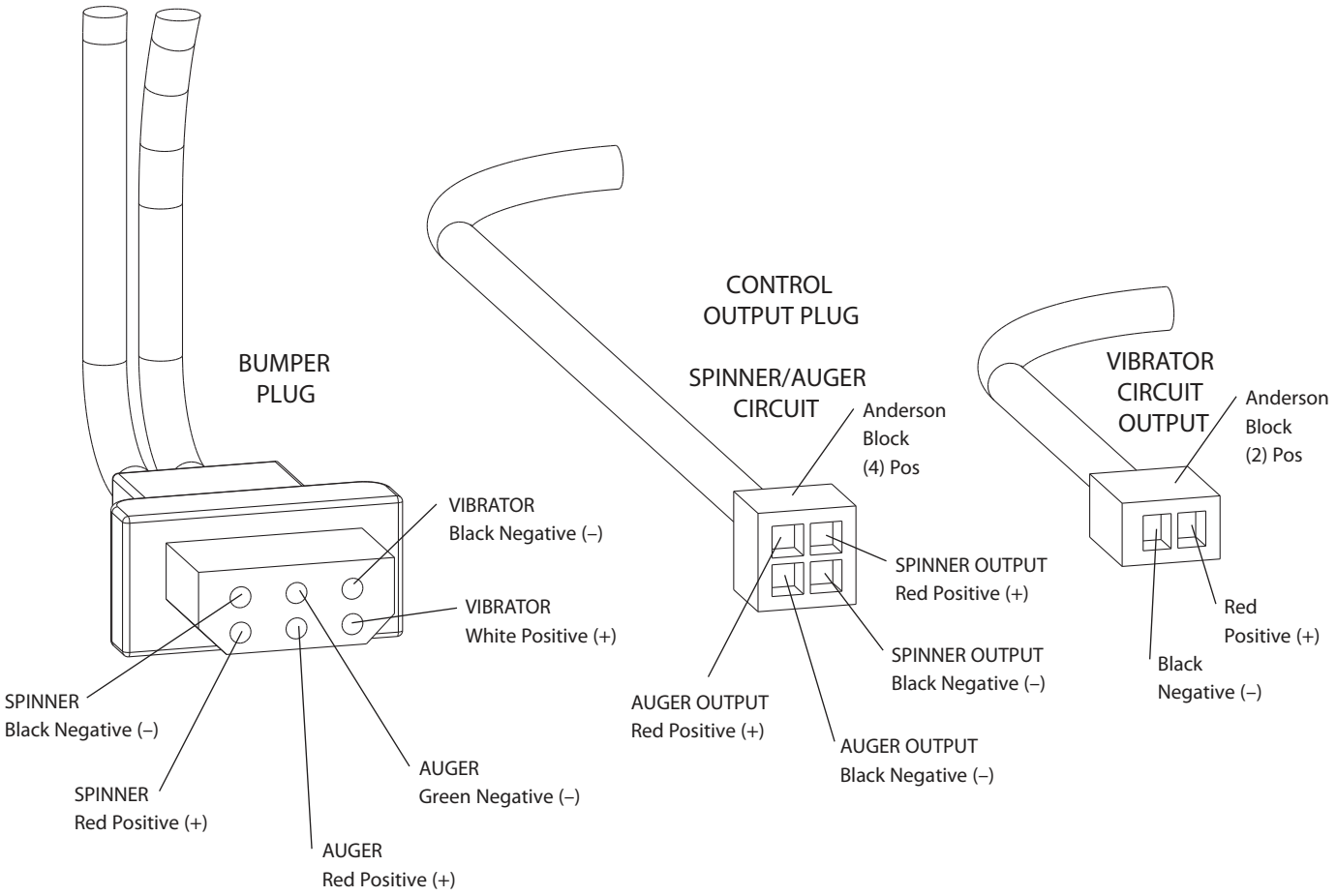

* NOTE: Reference Bumper Plug for Color Code

© Trynex International 2008

7500 Mounting System SMK-175

Mounting Instructions

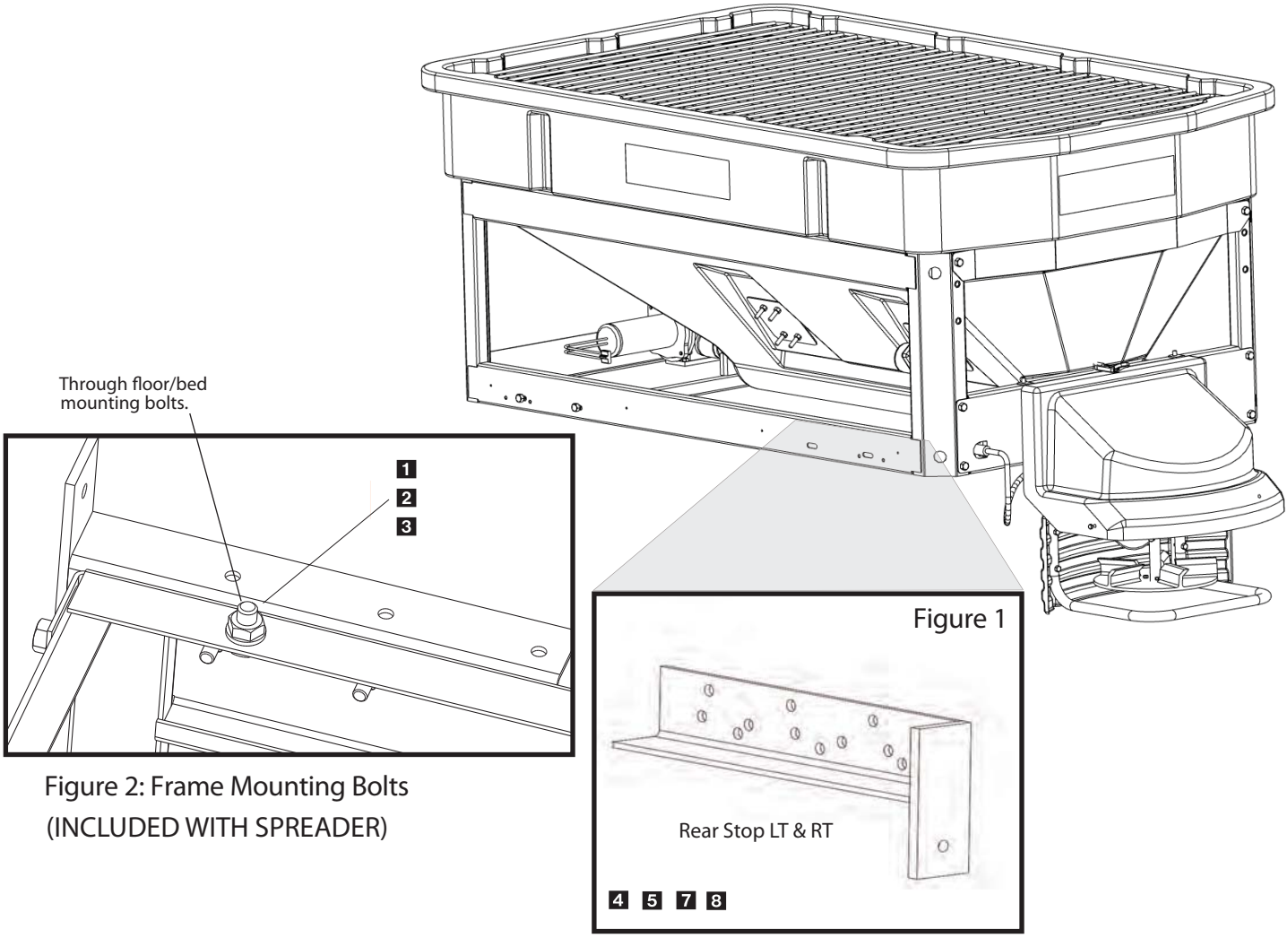

Figure 2: Frame Mounting Bolts (INCLUDED WITH SPREADER)

Key	Part No.	Description	Qty.
1	D 4116	1/2"-13 x1-1/2" Hex Bolt	4
2	D 4119	1/2" Flat Washer	4
3	D 4120	1/2" Lock Nut	4
4	D 4121	3/8"-16 x 1" Lock Nut	4
5	D 4124	3/8" Lock Nut	4
6	D 6856	2" Strap	4
7	D 6536	Adj. Stop Bracket RT	1
8	D 6537	Adj. Stop Bracket LT	1

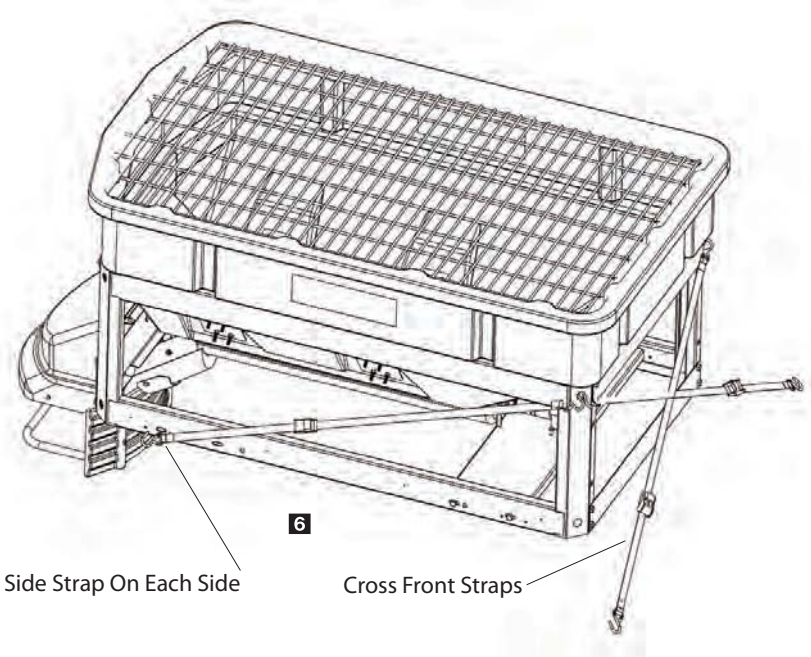

NOTE: Pay special attention when drilling or clamping dissimilar metals to aluminum bodies. Galvanic corrosion can occur if not handled properly. Contact vehicle manufacturer for recommended practices.

Step 1: Remove tailgate from pickup bed.

Step 2: Load spreader on to truck bed and mount spinner assembly.

Step 3: Slide spreader forward until deflector/chute assembly makes contact with vehicle. Then, slide spreader back approx. 1" to allow for proper clearance.

Step 4: Install stop bars using supplied hole patterns (see Fig.2). To achieve the best position, you may need to drill additional holes in bracket in order to properly position spreader.

Step 5: Now that the spreader is located front to back, you will now center it left to right. Looking at the inside front and rear corner area of the lower frame area, you will notice (4) holes in the bottom of the frame. Using a paint pen or similar marking device, mark hole locations.

Step 6: Before drilling holes, look beneath the approximate area where each hole will be located. Make sure there are no vehicle components that will be in the path of the drill before doing this step. If there are interferences, you can relocate holes as needed making sure there are at least two forward and two rearward of the front to back centerline.

Step 7: Install and tighten all (4) bolts.

Step 8: Install ratchet straps (see 7500 Mounting System: Strapping Techniques). It is very important for everyone's safety this strapping method be used as the standard mounting procedure. (Do not use ratchet straps exclusively.)

Step 9: Connect the spreader power cord to vehicle main power plug mounted at rear of vehicle (see Electrical Installation).

 © Trynex International 2008

XMT-275 Vee Pro Express Mount Kit

Mounting Instructions

NOTE: Pay special attention when drilling or clamping dissimilar metals to aluminum bodies. Galvanic corrosion can occur if not handled properly. Contact vehicle manufacturer for recommended attachment practices.

IN BED EXPRESS MOUNT

Step 1: Locate left and right side mounting rail 1 and 2.

Step 2: Locate item 3 cross rails.

Step 3: Assemble item 1, 2, 3 together per exploded view. (Accessory Shim 25 may be needed for adjustment).

Step 4: Install rear latches items 5 and 6 with 5/8" thin lock nut 7.

Step 5: Place frame assembly on truck and center left to right.

Step 6: Install items 4, 8 & 9 per illustration. Note: on older models, you will have to drill out frame to accept item 8 stop bolt. To do this, you will need to bolt item 4 to lower frame rail using a drill template to locate the bracket, drill all four holes and then install items 4, 8 & 9.

Step 7: Determine front to back location by either placing spreader into locked position into frame assembly or by measuring using rear side frame holes and measuring to rear of pick up bed. Mark holes with paint marker or scribe. Verify that there are no critical components below the pick up bed such as a gas tank, etc.

Step 8: Drill holes and mount frame using supplied 5/8" hardware. Note: There are alternate holes for drilling around items that may be in the way.

WHEEL KIT

Step 1: Assemble item 17 to item 16 using supplied hardware.

Step 2: Assemble items 20 to item 16 using supplied hardware.

Step 3: With spreader in truck, place item 21 wheel arm on the rear center of upper rail of hopper (see illustration/pictures).

Step 4: Place item 16 on auger weldment and trap the lower edge while at the same time positioning item 21 to engage item 20 so that item 15 pin with ring can keep the two assemblies together.

Step 5: Lock swivel wheels.

Step 6: Pull spreader back and off the in bed mount, allow spreader to rotate towards ground with the locked wheels touching first.

Step 7: Continue to pull spreader into a vertical position.

Step 8: When everything is stable, release wheel locks and slowly move spreader to storage location. Lock wheels when final place has been established.

Step 9: See photo and drawing illustrations for assembly and installation.

Note: Ratchet straps must still be used as part of the mounting system.

© Trynex International 2008 L1184

XMT-275 Express Mount Kit

Parts Breakdown

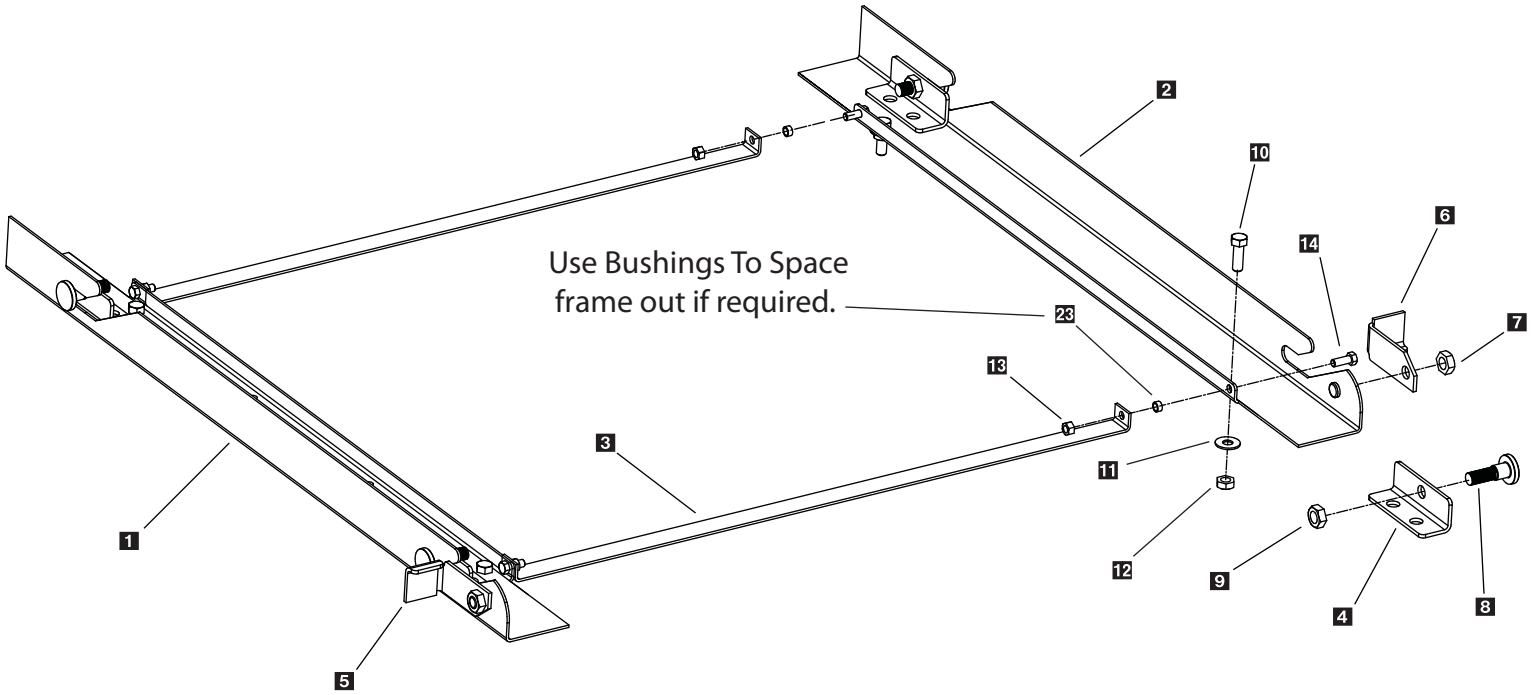

Key	Part No.	Description	Qty.
1	D 6590	Mounting Rail Left	1
2	D 6589	Mounting Rail Right	1
3	D 6591	Cross Rail	2
4	D 6595	Backing Plate	4
5	D 6593	Stop Latch Lt Side	1
6	D 6592	Stop Latch Rt Side	1
7	D 6573	5/8" Thin Lock Nut	2
8	D 6594	Special Stop Bolt	4
9	D 4127	5/8" Lock Nut	4
10	D 4116	1/2-13 x 1-1/2" Hex Bolt	8
11	D 6581	1/2" Fender Washer	8
12	D 4120	1/2" Lock Nut	8
13	D 4124	3/8-16 Lock Nut	5
14	D 4121	3/8-16 x 1" Hex Bolt	4
15	D 6572	Wheel Ball Pin	1
16	D 6567	Wheel Cross Bar	1
17	D 6570	Wheel Pivot w/Lock	2
18	D 6576	5/16-18 x 1-1/4" Hex Bolt	12
19	D 6138	5/16-18 Lock Nut	12
20	D 6568	Wheel Foot Holder	1
21	D 6569	Wheel Arm	1
22	D 6587	3/8-16 x 2-1/2 HHCS Bolt	1
23	D 5717	Nylon Spacer Bushing	4

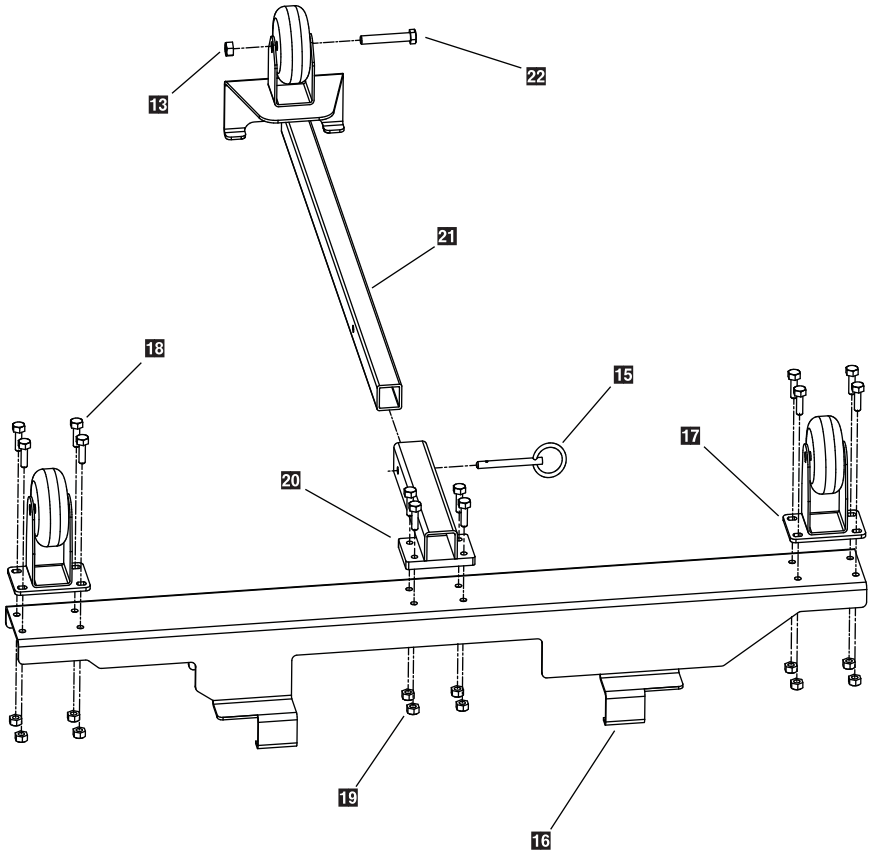

© Trynex International 2008 L1184

FFK-020 Assembly Instructions

Baffle Kit For 7500 Spreader

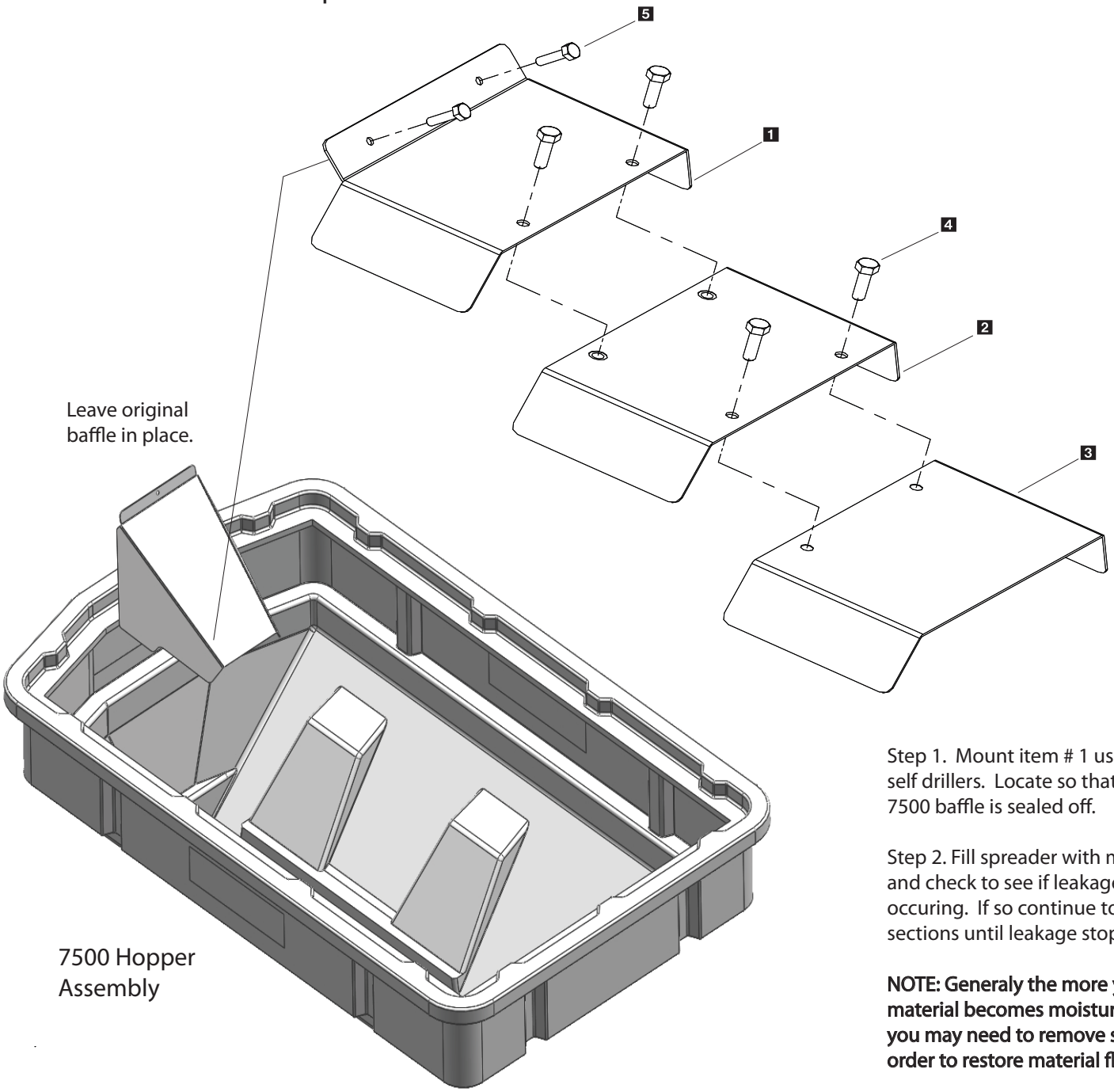

Step 1. Mount item # 1 using two self drillers. Locate so that existing 7500 baffle is sealed off.

Step 2. Fill spreader with material and check to see if leakage is still occuring. If so continue to add sections until leakage stops

NOTE: Generaly the more your material becomes moisture layden, you may need to remove sections in order to restore material flow.

Key	Part No.	Description	Qty.
1	D 5537	Main Baffle	1
2	D 5538	Baffle Section # 2	1
3	D 5539	Baffle Section # 3	1
4	D 6166	5/16-18 x 1" Hex Head	4
5	D 6418	5/16 x 1" Hwh Driller	2

© Trynex International 2008

DISCHARGE BAFFLE & INVERTED-V INSTRUCTIONS

- The 7550 uses a Inverted-v design over the auger area.
  This inverted-v (D5510) is used to reduce load to the auger drive train.
  It must not be removed unless servicing the unit.
- The 7550 uses a discharge baffle (D5517) to reduce material leakage
  It must not be removed unless servicing the unit.
- WARNING: Always disconnect power source before attempting to remove material baffle.

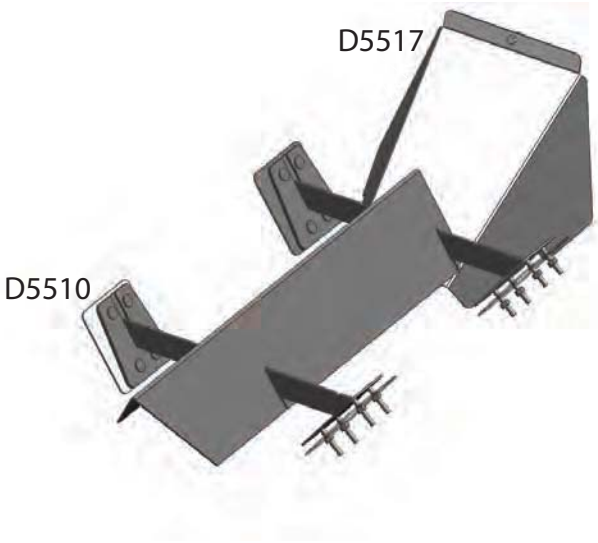

DRIVE ENCLOSURE INSTALLATION AND REMOVAL INSTRUCTIONS

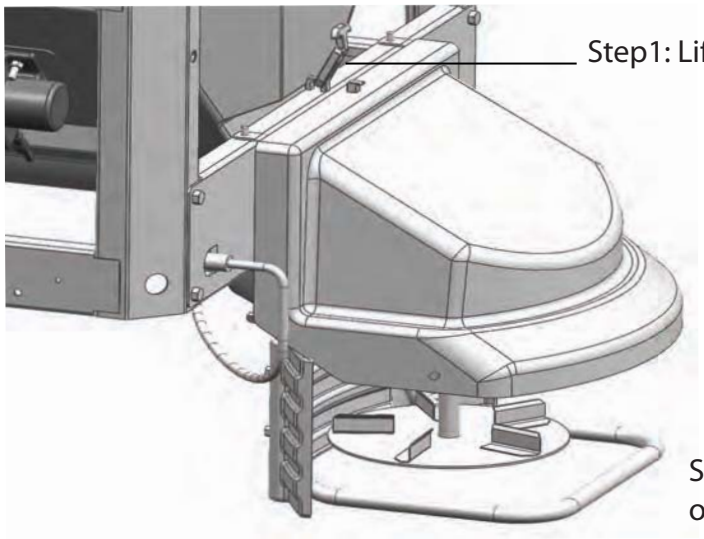

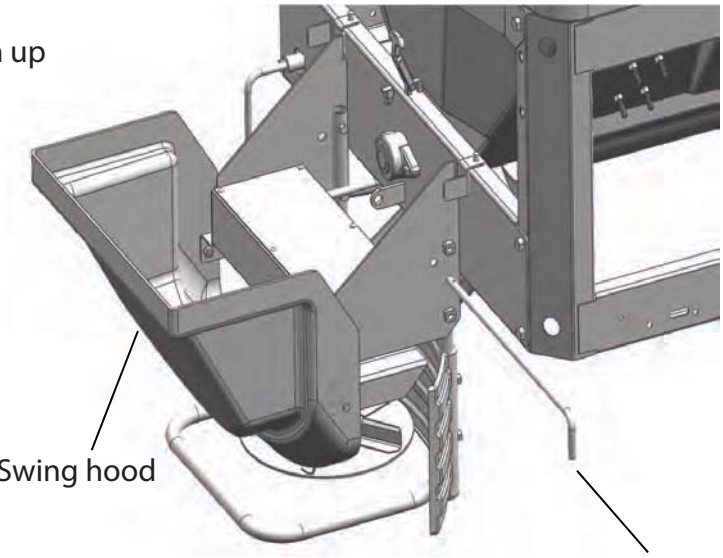

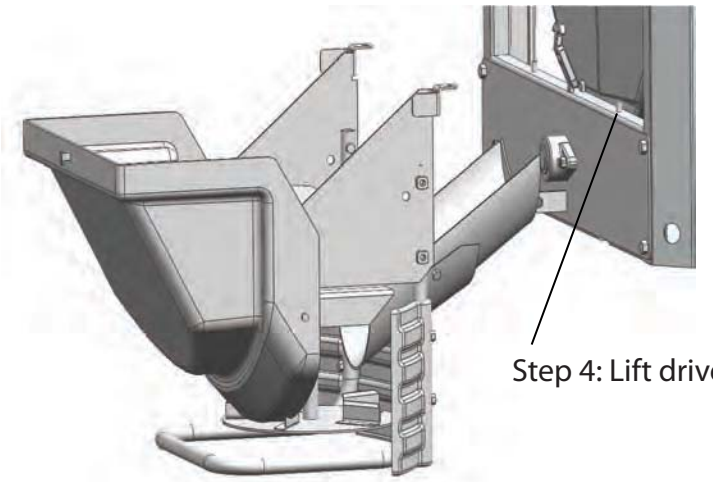

© Trynex International 2008 L1184

PREPARATION

CAUTION – Sweep area clear of foreign objects or obstacles that could cause personal injury. Keep other persons, children, or animals out of the area to be spread.

SPREADER LOADING

WARNING –Do not overload vehicle. Use chart below to calculate weight of material. Weights of material are an average for dry materials.

Material	Weight Per Cubic Ft.
Rock Salt	45-80 lbs.
Sand/Salt Mix	95-120 lbs.

- Be sure to comply with manufacturer's maximum gross vehicle weight ratings.
- Warning– Never leave materials in hopper for long periods of time as salt is hygroscopic and will attract atmospheric moisture and harden up. When spreading sand mix, a 1:1 ratio for Sand/Salt mix is recommended to prevent the material from freezing.

SPREADING TIPS

- Never exceed 10 m.p.h. when spreading.
- For a wider pass, increase spinner speed.
- For a heavier pass, drive slower, or increase auger speed.
- Never operate spreader near pedestrians.
- Spread ice melters with the storm to prevent unmanageable levels of ice.
- Calculate spread pattern when near vegetation.

7500 CONTROL OPERATION

- The Dual Variable Speed Control has dual finger-tip dials for maximum performance, digital system status with warning protection and built-in Vibrator Switch.
- To start, press power switch on controller and spreader will accelerate to speed set on spinner and auger dials.
- To stop, press power switch on controller to off position.
- Speed of auger and spinner may be adjusted separately to get desired flow and spread distance from spreader.
- The Vibrator Switch is needed for dense material or to increase the flow to the auger. This eliminates bridging of material in hopper.

WARNING PROTECTION

- If audible beeping occurs, read display to identify problem. If display reads “OL” (overload) or “OH” (overheat). Shut controller down and carefully clear jammed auger. If display reads “E1“ this means there is a dead short in system. Do not use until problem is cor rected. If display reads “E 0” this means that the motor is not getting any power. Check all connections. If display reads “LB” the vehicle battery is extremely low (possibly caused by a poor or corroded connection) and could damage the system.
- If there are any problems while operating the spreader, refer to Troubleshooting Guide.

Whenever service is necessary, your local SnowEx Dealer knows your Spreader best. Take your Spreader to your local dealer for any maintenance or service needs on your unit. If this is not possible, the Troubleshooting Guide below may assist you in identifying the problem.

Warning: First read all warning instructions and safety messages before servicing your spreader.

Preliminary Checks
- Be sure all electrical connections are tight and clean.
- Be sure nothing is jammed in the hopper.

PROBLEM	POSSIBLE CAUSE	SOLUTION
Motor doesn't run.	Loose electrical connections.	Check all connections.
	Blown Fuse.	Replace fuse.
	Motor Seized.	Replace motor.
Controller shut down.	Jammed auger.	Carefully clear jammed material.
	Poor electrical connections.	Clean or replace connectors. Use dielectric grease.
	Electrical short.	Check electrical connections. Check for bare wires.
	Controller failure.	Replace controller.
Material not flowing from hopper.	Empty hopper.	Fill hopper.
	Wet material.	Replace with dry material.
	Frozen or coarse material.	Replace material.
	Spinner not turning.	Check drive assembly.
	Auger loose on shaft.	Tighten locking bolt on the side of the auger. There is a flat machined on the driver shaft. Align the auger with this flat and tighten the bolt.
	Vibrator not working.	Replace vibrator
Audible alarm beeping and display shows OL or OH.	Jammed auger, overload shut down.	Turn off for three seconds, then restart. If shut down continues, turn off controller. Clear debris and lumps from auger areas.
Audible alarm beeping display shows E1.	Short in system.	Turn off. Do not use until problem is corrected.
Audible alarm beeping display shows EO.	Motor is not getting power.	Turn off. Check all connections.
Audible alarm beeping display shows LB.	Vehicle battery is extremely low, or a poor connection exists.	Turn off. Charge battery.

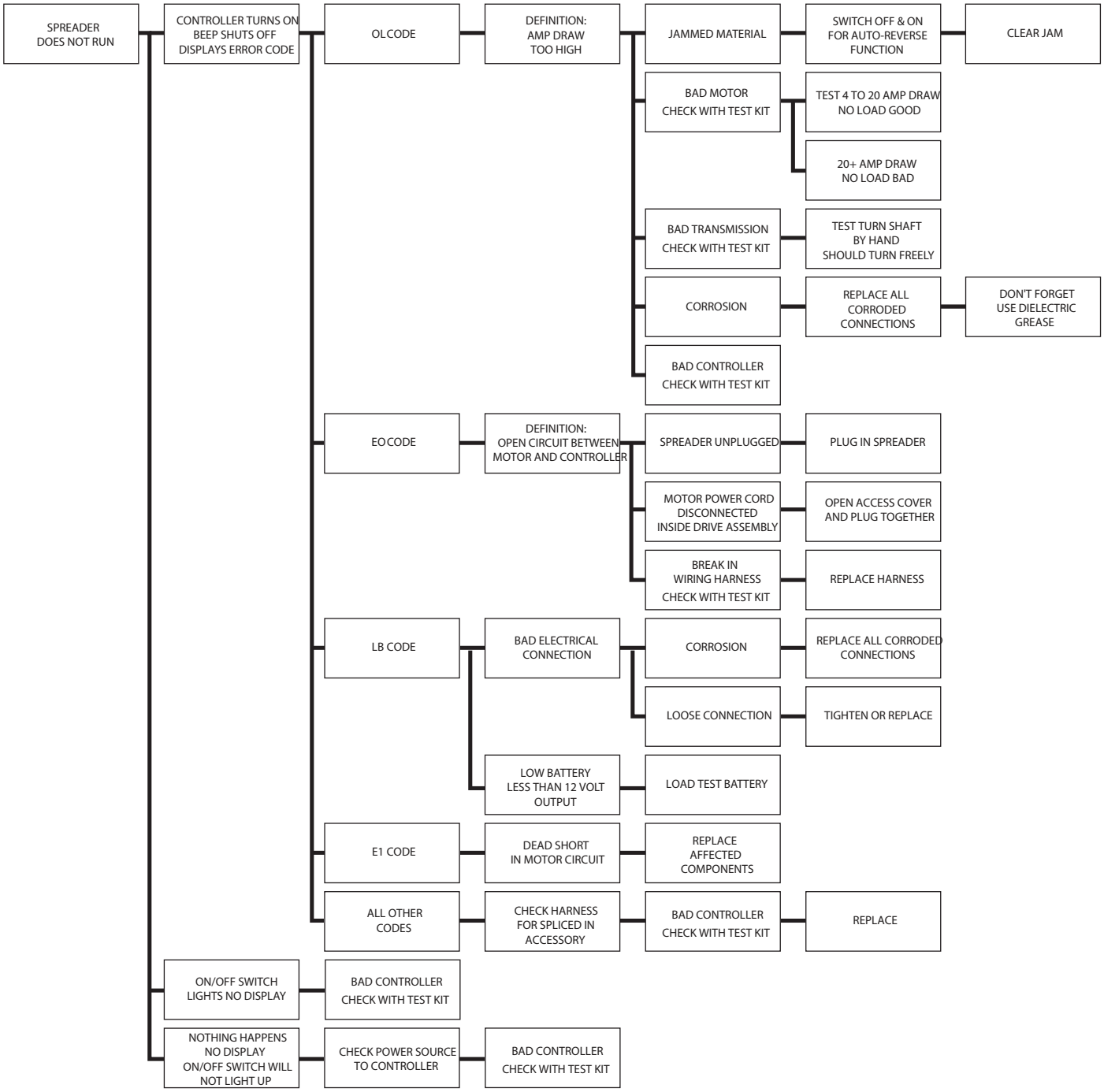

© Trynex International 2008 L1184

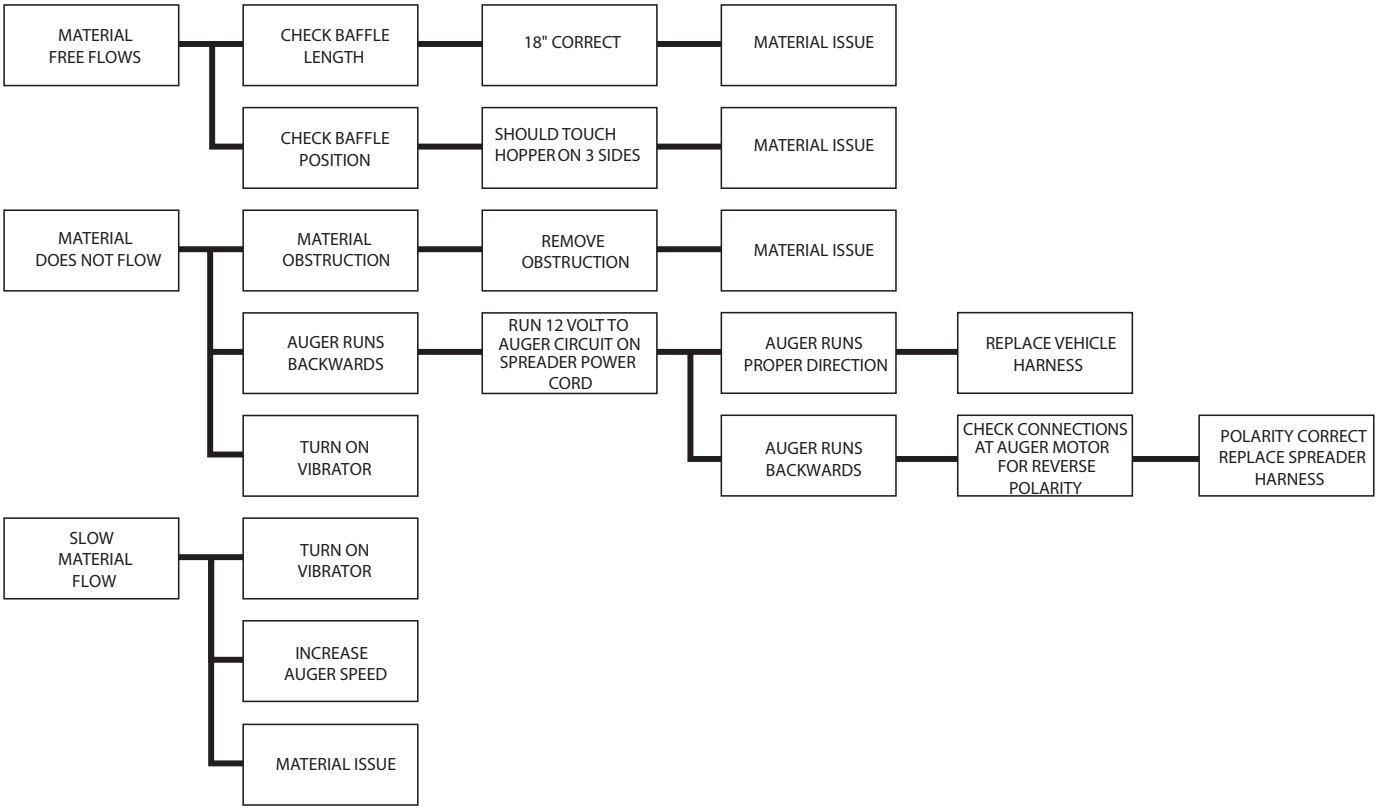

* Spreader capable of speading most granular bulk material, including coarse 50/50 salt/sand mix.

- WARNING – When servicing is necessary, perform it in a protected area. Do not use power tools in rain or snow because of danger of electrical shock or injury. Keep area well lighted. Use proper tools. Keep the area of service clean to help avoid accidents.
- WARNING – Disconnect electricity to spreader before servicing.
- CAUTION – The controller is a solid state electronic unit and is not serviceable. Any attempt to service will void warranty.
- CAUTION – There are no serviceable parts in the motor/transmission assembly. Any attempt to service will void warranty.
- CAUTION – When replacing parts use only original manufacturer's parts. Failure to do so will void warranty.
- Use diaelectric grease on all electrical connections to prevent corrosion at the beginning and end of the season and each time plugs are disconnected.
- Gently wash unit after each use to prevent material build-up and corrosion.
- CAUTION – When pressure washing motor enclosure area stay at least 36" away from all electrical items.
- Paint or oil all bare metal surfaces at the end of the season.
- Apply small amount of light oil to latches as needed.
- If motor cover is removed for any reason, use silicone sealant to ensure weather proofing of enclosure.
- Grease bearings after every 20 hours use.
- After first use, tighten all nuts and bolts on spreader and mount.
- WARNING: Never remove spreader with material in hopper.
- ATTENTION: Store control in cool dry place during the off season.

© Trynex International 2008 L1184

Determining Vehicle Payload

Material Type	Example: Coarse Salt – Dry				
Equipment installed when vehicle was weighed	7500				
Front Gross Axle Weight Rating (RGAWR)					
Rear Vehicle Weight Rating (GVWR) (lb.)	8600				
Gross Vehicle Weight (GVW) (lb.) (empty)	– 6500	–	–	–	–
Payload Available (lb.)	= 2100	=	=	=	=
Material Weight (lb./cu. yd.)	1431				
Maximum Volume (cu. yd.)	= 1.47	=	=	=	=
Maximum Height (approximate) (in.)	24"				
Loaded Front Gross Axle Weight (FGAW) (lb.)					
Loaded Rear Gross Axle Weight (RGAW) (lb.)					
Loaded Gross Vehicle Weight (GVW) (lb.)					

Torque Chart

When tightening fasteners, refer to the Torque Chart below for the recommended fastener torque values.

Recommended Fastener Torque Chart (ft.-lb.)			
SIZE	SAE Grade 2	SAE Grade 5	SAE Grade 8
1/4-20	6	9	13
5/16-18	11	18	28
3/8-16	19	31	46
3/8-24	24	46	68
7/16-14	30	50	75
1/2-13	45	75	115
9/16-12	66	110	165
5/8-11	93	150	225
3/4-10	150	250	370
7/8-9	202	378	591
1-8	300	583	893

Metric Grade 8.8 (ft.-lb.)			
SIZE	TORQUE	SIZE	TORQUE
M 6	7	M 12	60
M 8	17	M 14	95
M 10	35	M 16	155

These torque values apply to mount assembly fasteners except those noted in the instruction.

Material Weights

Refer to the table below for the weight per cubic yard of common spreading materials.

MATERIAL	WEIGHT (lb. per cubic yard)
Fine Salt – Dry	2,025
Coarse Salt – Dry	1,431
Sand/Salt Mix – Dry (50/50)	2,700
Cinders	1,080

THIS PAGE INTENTIONALY LEFT BLANK

© Trynex International 2008

THIS PAGE INTENTIONALY LEFT BLANK

Limited Warranty

Warranty will be for a period of two years from the date of purchase against defects in material or workmanship under normal use and service, subject to limitations detailed below. Warranty period of one year begins on the date of purchase by the original retail user.

The WARRANTY REGISTRATION CARD must be returned to the manufacturer for this warranty to become effective. This warranty applies to the original retail purchaser only. This warranty does not cover damages caused by improper installation, misuse, lack of proper maintenance, alterations or repairs made by anyone other than authorized Trynex dealers or Trynex personnel. Due to the corrosive properties of the materials dispensed by spreaders, Trynex does not warrant against damage caused by corrosion. Warranty claims by the user must be made to the dealer from where the product was purchased, unless otherwise authorized by Trynex. Trynex reserves the right to determine if any part is defective and to repair or replace such parts as it elects. This warranty does not cover shipping costs of defective parts to or from the dealer.

LIMITATION OF LIABILITY

Neither Trynex, nor any company affiliated with it, makes any warranties, representations for promise as to the performance or quality other that what is herein contained. The liability of Trynex to the purchaser for damages arising out of the manufacture, sale, delivery, use or resale of this spreader shall be limited to and shall not exceed the costs of repair or replacement of defective parts. Trynex shall not be liable for loss of use, inconvenience or any other incidental, indirect or consequential damages, so the above limitations on incidental or consequential damages may not apply to you.

NO DEALER HAS AUTHORITY TO MAKE ANY REPRESENTATION OR PROMISE ON BEHALF OF TRYNEX INTERNATIONAL, OR TO ALTER OR MODIFY THE TERMS OR LIMITATIONS OF THIS WARRANTY IN ANY WAY.

© Trynex International 2008 L1184

Warranty Registration and Customer Survey

To initiate the warranty on your new SnowEx spreader and assure prompt warranty service, please complete the following warranty registration and customer survey, sign and mail it back to the factory within 30 days of purchase.

1) Date of Purchase: _____

2) Name: _____

Address: _____

_____

Phone: _____

3) SnowEx Model Purchased: _____ Serial Number: _____

4) Is this your first Trynex Spreader? ❑ Yes ❑ No

5) What type of vehicle are you using with your Spreader?

Make _____ Model _____ Year _____

6) What type of material are you using in your spreader? _____

7) SnowEx Dealer Name: _____

SnowEx Dealer Address: _____

_____

SnowEx Dealer Phone: _____

8) Does your Trynex Dealer stock Trynex replacement Parts? ❑ Yes ❑ No ❑ I don't know

9) Do you feel your Trynex Dealer sold you the correct product for your needs/application? ❑ Yes ❑ No

10) How would you rate your overall satisfaction with your SnowEx Dealer?	❑ Very Satisfied	❑ Satisfied	❑ Somewhat Satisfied	❑ Somewhat Dissatisfied	❑ Dissatisfied	❑ Very Dissatisfied
11) How would you rate your overall satisfaction with your SnowEx Product?	❑ Very Satisfied	❑ Satisfied	❑ Somewhat Satisfied	❑ Somewhat Dissatisfied	❑ Dissatisfied	❑ Very Dissatisfied

12) Would you purchase another Trynex Product? ❑ Yes ❑ No

13) If you would like to receive E-Mail ALERTS for new products, bulletins or special promotions please supply address : _____

14) Please use the space below to convey your comments and/or suggestions.

_____

_____

_____

_____

NOTE: I have read the owner's manual and all safety precautions and I understand that this equipment could be dangerous if not operated with care and under the proper conditions.

15) Owner's signature: X _____

PLEASE FOLD AND SEAL WITH TRANSPARENT TAPE BEFORE MAILING.

Warm Up to SNOWEX®

with a

FREE

Winter Hat!

Simply Fill Out Your Warranty Registration and Return It to the Factory!

From:

_____

_____

_____

Postage Required
Post Office will not deliver without proper postage.

TRYNEX® INTERNATIONAL

23455 REGENCY PARK DR.
WARREN MI 48089-2667

Rev. 07