Owner / Operator's Manual

This Manual Must Be Read Before Operating The Equipment

SNOWEX®

LEADERS IN ICE CONTROL

SP-2400

TRYNEX INTERNATIONAL

CUSTOMER COPY

Madison Heights, Michigan 48071
800-725-8377
www.snowexproducts.com

© Trynex International 2009

Table of Contents

Introduction 3
General Information and Registration 4
Safety Information 5-7
Spreader Assembly and Exploded Views 8-17
Wiring Instructions For Spreader & Work Light 18
Electrical System Information 19-22
Spreader Mounting System 23-24
Work Light Assembly & Spreader Operating Information 25-28
Troubleshooting Information 29-31
Spreader Maintenance 32
Determine Vehicle Payload Chart 33
Warranty 34-35

Have a question or need assistance?

SnowEx Customer Service

(800) 725-8377

or (586) 756-6555

Monday through Friday 8:00 AM to 4:30 PM EST

Fax: (586) 427-0552

E-Mail: customercare@trynexfactory.com

Website: www.snowexproducts.com

© Trynex International 2009

This manual has been designed for your help. It will assist you and instruct you on the proper set-up, installation and use of this spreader. Refer to the table of contents for an outline of this manual.

We require that you read and understand the contents of this manual completely (especially all safety information) before attempting any procedure contained herein.

THIS SIGN SHOULD ALERT YOU:
The Society of Automotive Engineers has adopted this SAFETY ALERT SYMBOL to pinpoint characteristics that, if NOT carefully followed, can create a safety hazard. When you see this symbol in this manual or on the machine itself, BE ALERT! Your personal safety and the safety of others is involved.

Defined below are the SAFETY ALERT messages and how they will appear in this manual:

DANGER

(RED)
Information that, if not carefully followed, can cause death!

WARNING

(ORANGE)
Information that, if not carefully followed, can cause serious personal injury or death!

CAUTION

(YELLOW)
Information that, if not carefully followed, can cause minor injury or damage to equipment.

CONGRATULATIONS!

The spreader you have purchased is an example of snow and ice control technology at its finest! Your spreader's innovative, self-contained design is a trademark of all Trynex products. Here's why...

SIMPLICITY: Fewer moving parts manufactured of higher quality means minimal maintenance for your SnowEx spreader.

RELIABILITY: High impact linear low density polyethelyne hopper, state-of-the-art electronic dual variable speed control, custom engineered powder coated frame, maximum torque 12 volt motor coupled to a custom engineered transmission found only on SnowEx products.

VERSATILITY: Multi-use capabilities allows spreading of a variety of materials for snow and ice control.

WARRANTY: Best in the industry, hands down! 2 Years Standard and now a 5 Year Extended (optional).

The benefits you are about to recognize are that of time, money and effort.
We welcome you to the world of Trynex Performance.

Registration

Record the following information in this manual for quick reference.

Spreader Model Number _____

Spreader Serial Number _____ Controller Serial Number _____

Date of Purchase _____

Dealer Where Purchased _____

When ordering parts, the above information is necessary. This will help to insure that you receive the correct parts.

At the right is a diagram of the ID tag. This tag on the spreader is located on the frame.

Please fill out the warranty card with all the necessary information to validate it. This will also give us a record so that any safety or service information may be communicated to you.

 © Trynex International 2009

DANGER **WARNING** **CAUTION**

Before attempting any procedure in this book, these safety instructions must be read and understood by all workers who have any part in the preparation or use of this equipment.

For your safety warning and information decals have been placed on this product to remind the operator of safety precautions . If anything happens to mark or destroy the decals, please request new ones from Trynex, International.

WARNING Unit must be strapped down and locked into position before operating vehicle.

DANGER Never exceed the Gross Vehicle Weight Rating of vehicle. Failure to do so may limit a vehicles handling characteristics.

DANGER Never attempt to take a unit off a truck with material in it.

WARNING Never exceed 45 m.p.h. when loaded spreader is attached to vehicle. Braking distances may be increased and handling characteristics may be impaired at speeds above 45 m.p.h.

WARNING Never allow children to operate or climb on equipment.
Always check areas to be spread to be sure no hazardous conditions or substances are in the area.
Always inspect unit for defects: broken, worn or bent parts, weakened areas on spreader or mount.

WARNING Always shut off vehicle and power source before attempting to attach or detach or service spreader unit. Be sure vehicle/power source is properly braked or chocked.

WARNING Always keep hands, feet, and clothing away from power-driven parts. Remember it is the owner's responsibility to communicate information on safe usage and proper maintenance of all equipment.

WARNING Always make sure personnel are clear of areas of danger when using equipment. Maintain 60' distance from all bystanders when operating the spreader.

WARNING Inspect the unit periodically for defects. Parts that are broken, missing, or worn out must be replaced immediately. The unit, or any part of it cannot be altered without prior written permission from the manufacturer.

CAUTION Never use V-Maxx 2400 with foreign debris in the spreader. These units are designed to handle clean, free-flowing material.

WARNING Always inspect pins and latches whenever attaching or detaching spreader, and before traveling.

CAUTION Never leave material in hopper for long periods of time. Be aware that all ice melters are hygroscopic and will attract atmospheric moisture and harden up.

WARNING Remember, most accidents are preventable and caused by human error. Exercising of care and precautions must be observed to prevent the possibility of injury to operator or others!

WARNING Never operate equipment when under the influence of alcohol, drugs, or medication that might alter your judgment and/or reaction time.

WARNING Before working with the spreader, secure all loose fitting clothing and unrestrained hair.

WARNING Always wear safety glasses with side shields when servicing spreader. Failure to do this could result in serious injury to the eyes.

© Trynex International 2009 L1186

Safety and Warning Labels

Model # SP-2400

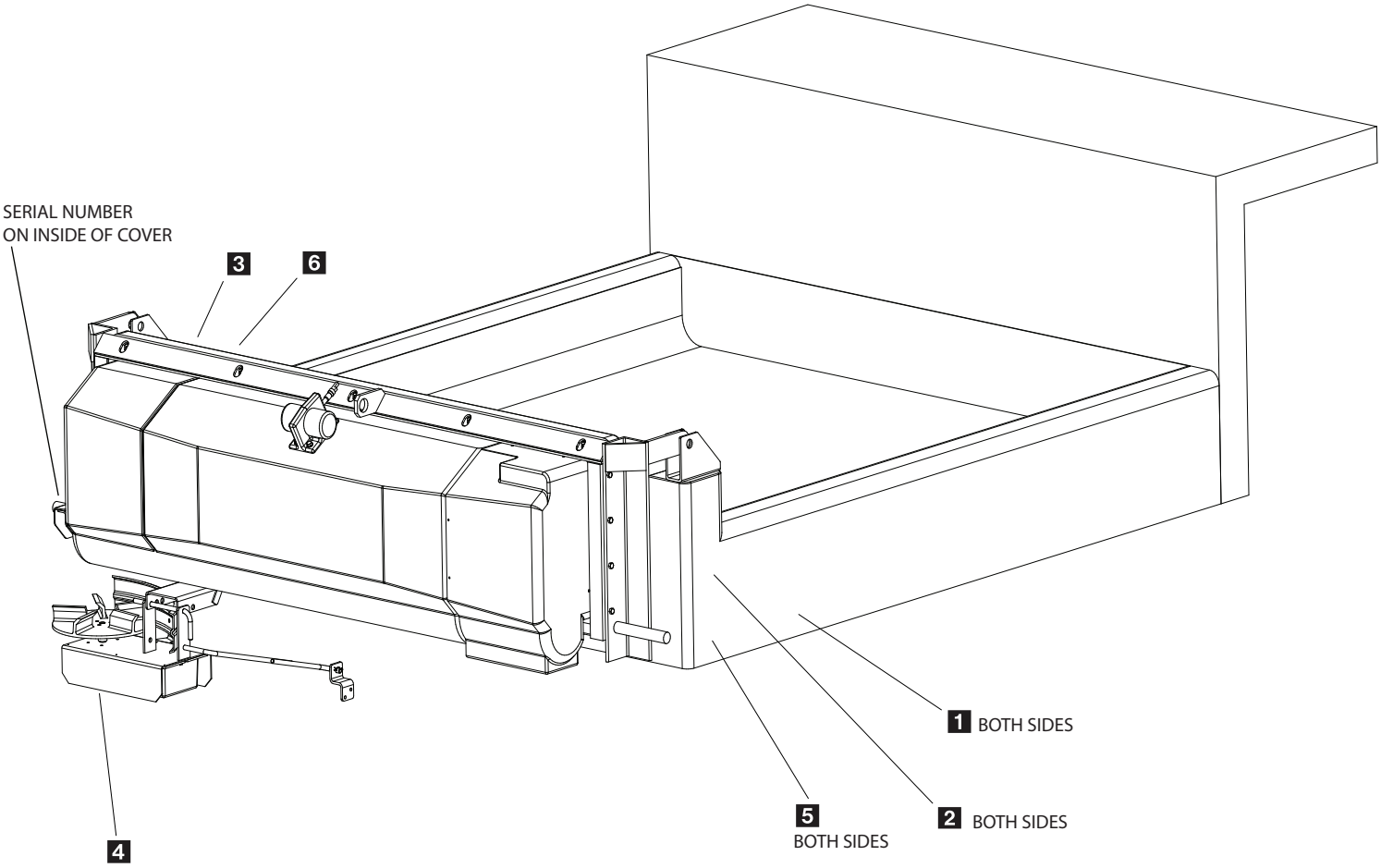

1 D 6546

2 D 5703

3 D 5704

4 D 6544

5 D 6335

6 D 6548

Component Assembly Views

Model # SP-2400

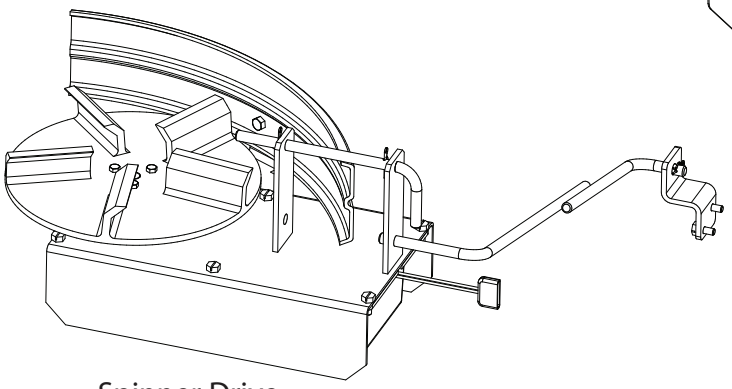

Spinner Drive Assembly

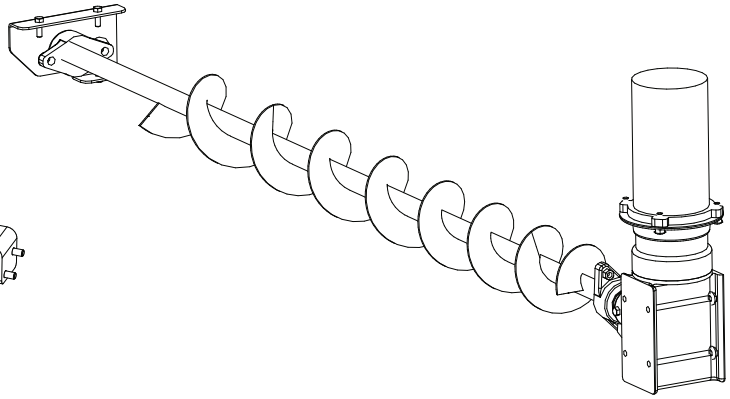

Auger Drive Assembly

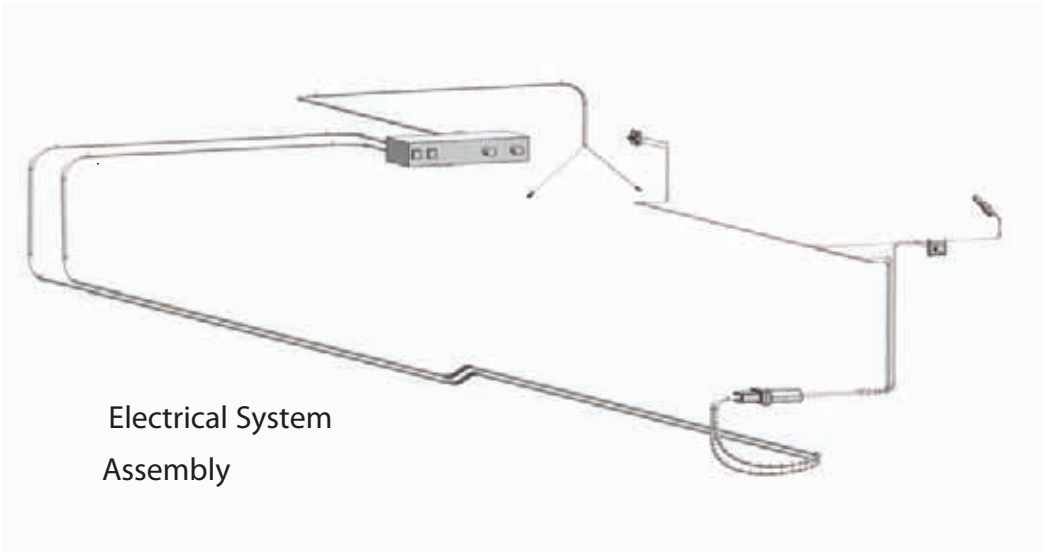

Electrical System Assembly

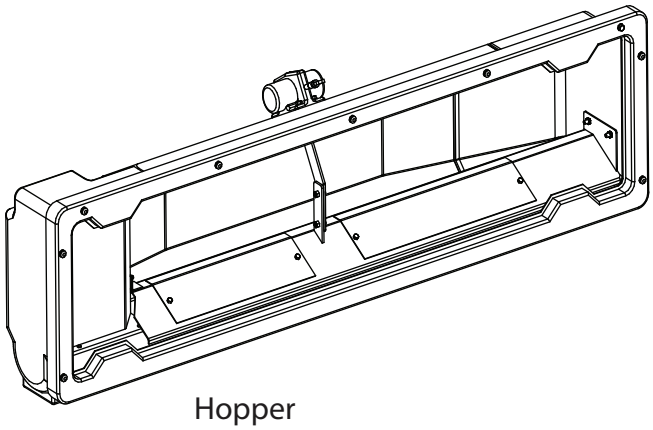

Hopper Assembly

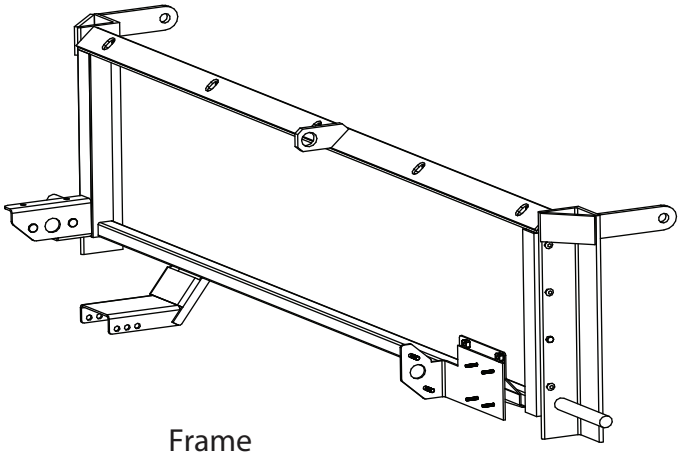

Frame Assembly

 © Trynex International 2009

Front and Rear Views

Model # SP-2400

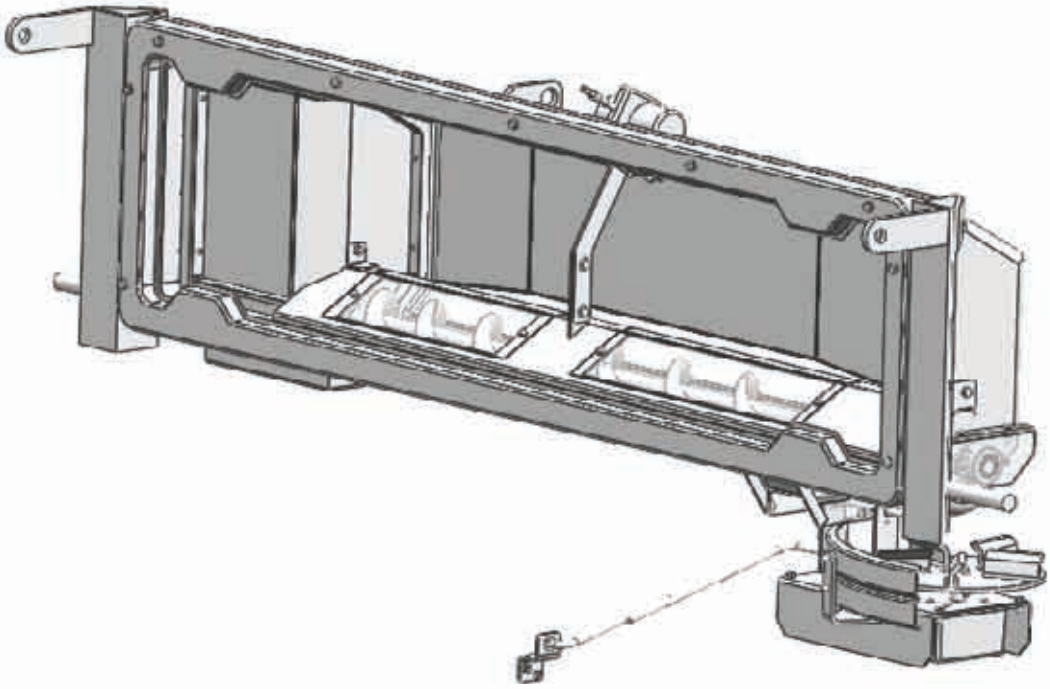

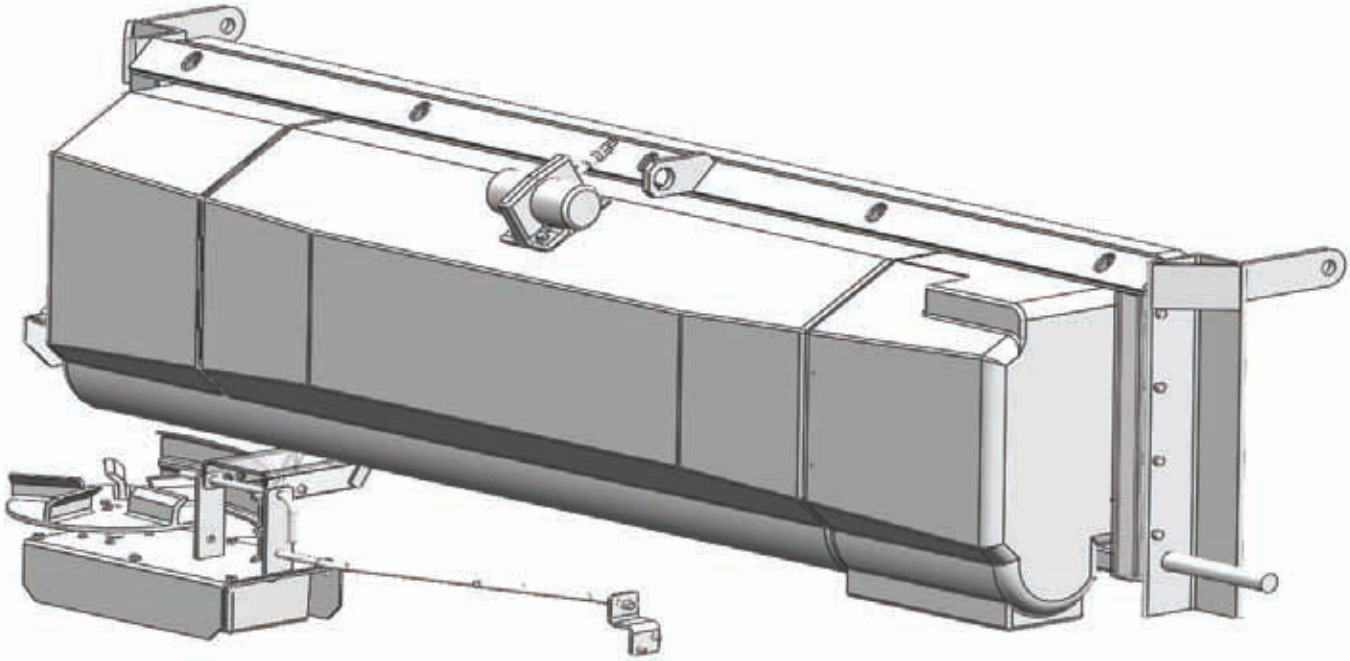

Auger Drive Assembly Parts Breakdown

Model # SP-2400

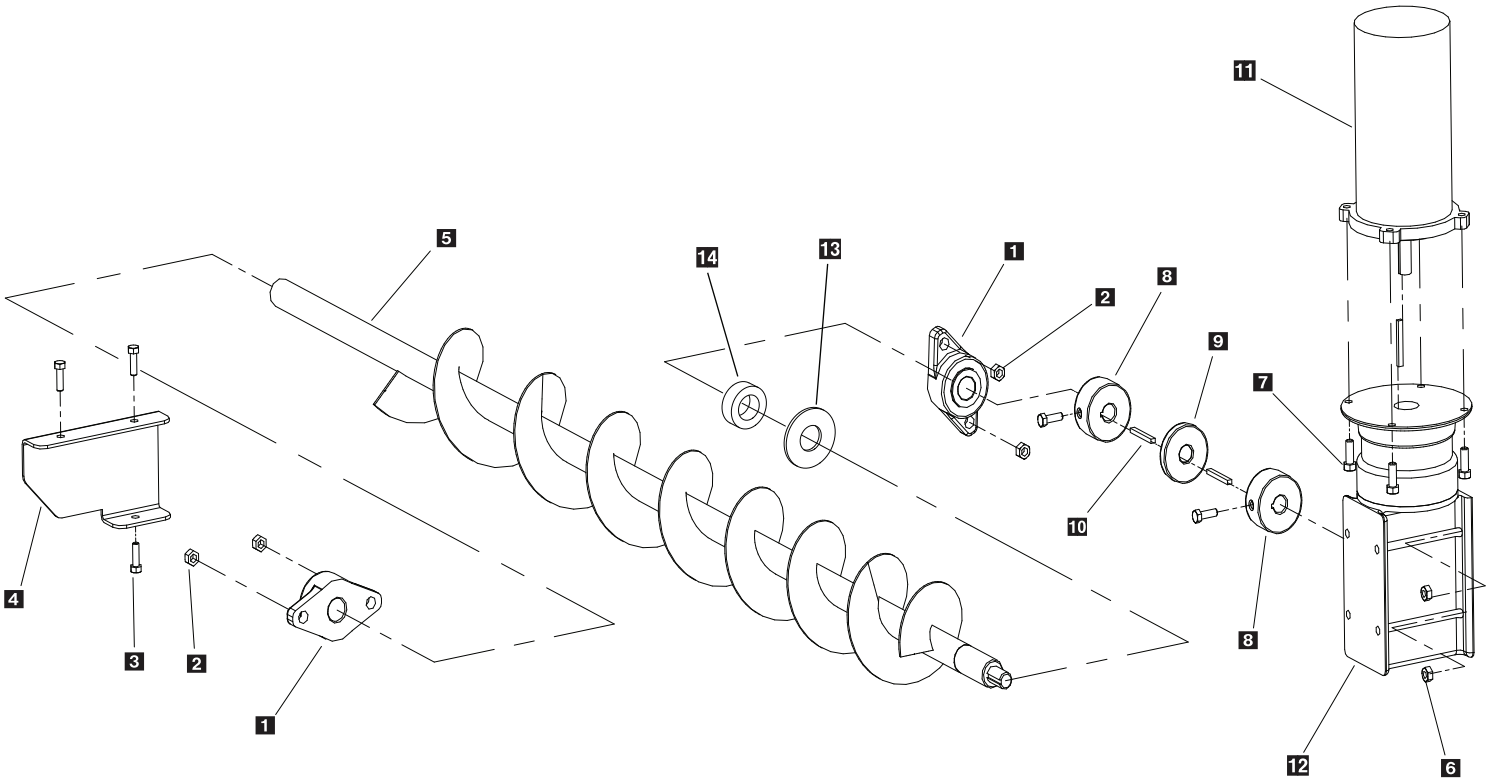

L1186 © Trynex International 2009

Auger Drive Assembly Parts Breakdown

Model # SP-2400

Key	Part No.	Description	Qty
1	D5527	1" Bearing	2
2	D6584	3/8" Flange Nut	4
3	D6453	5/16" x 1" Serrated 18-8 SS	3
4	D5702	Bearing Cover	1
5	D5709	6" Variable Pitch Auger	1
6	D5706	5/16" Serrated Flange Nut	4
7	D6452	3/8" Serrated HHCS	4
8	D6842	Love Joy Coupling	2
9	D6843	Urethane Spyder	1
10	D6873	3/16" Key Stock	3
11	D5522	12 Volt Auger Motor	1
12	D6894	Auger Transmission	1
13	D6789	Auger Shaft Hopper Washer	1
14	D6792	Auger Shaft Hopper Collar	1

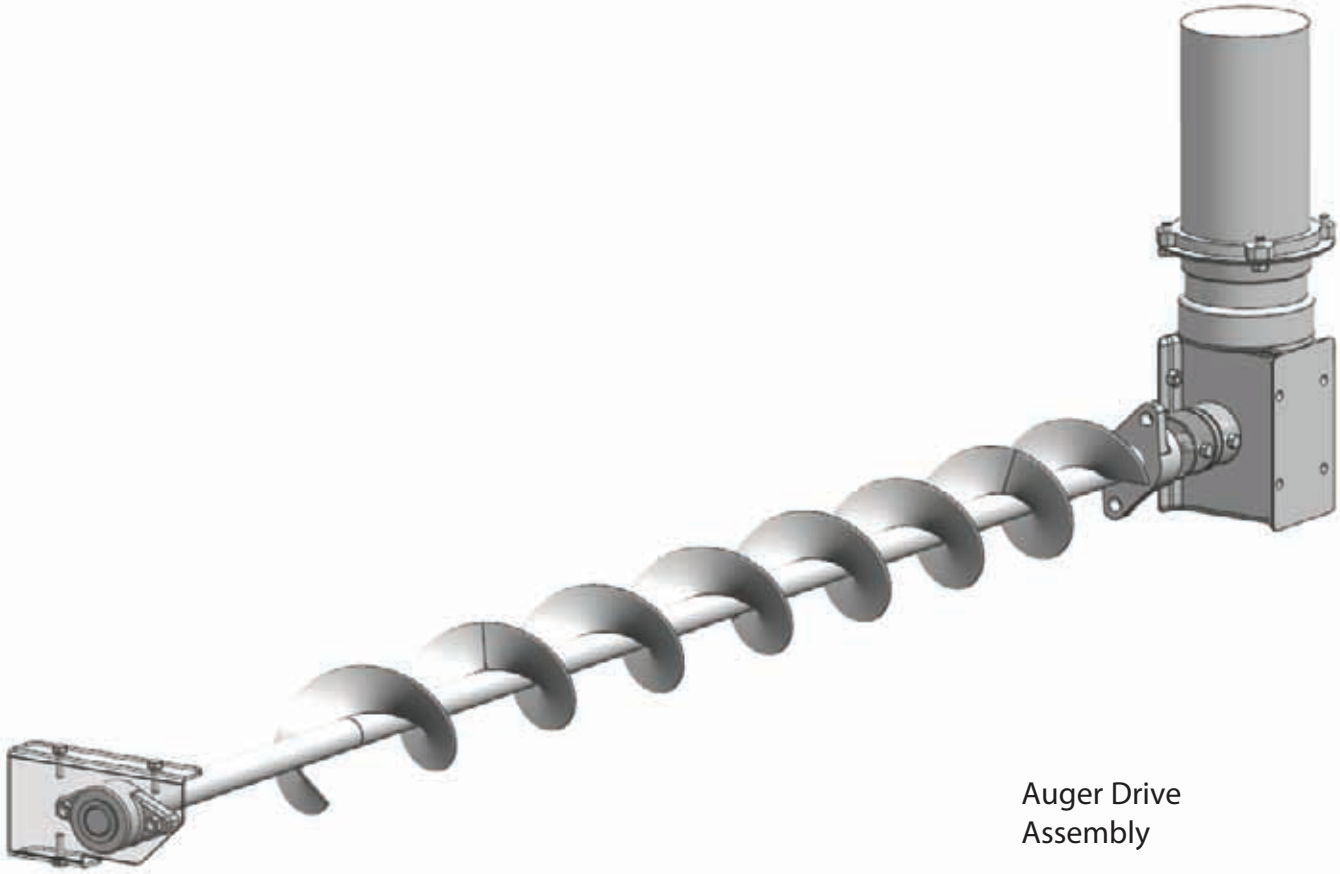

Auger Drive Assembly

Spinner Drive Assembly Parts Breakdown

Model # SP-2400

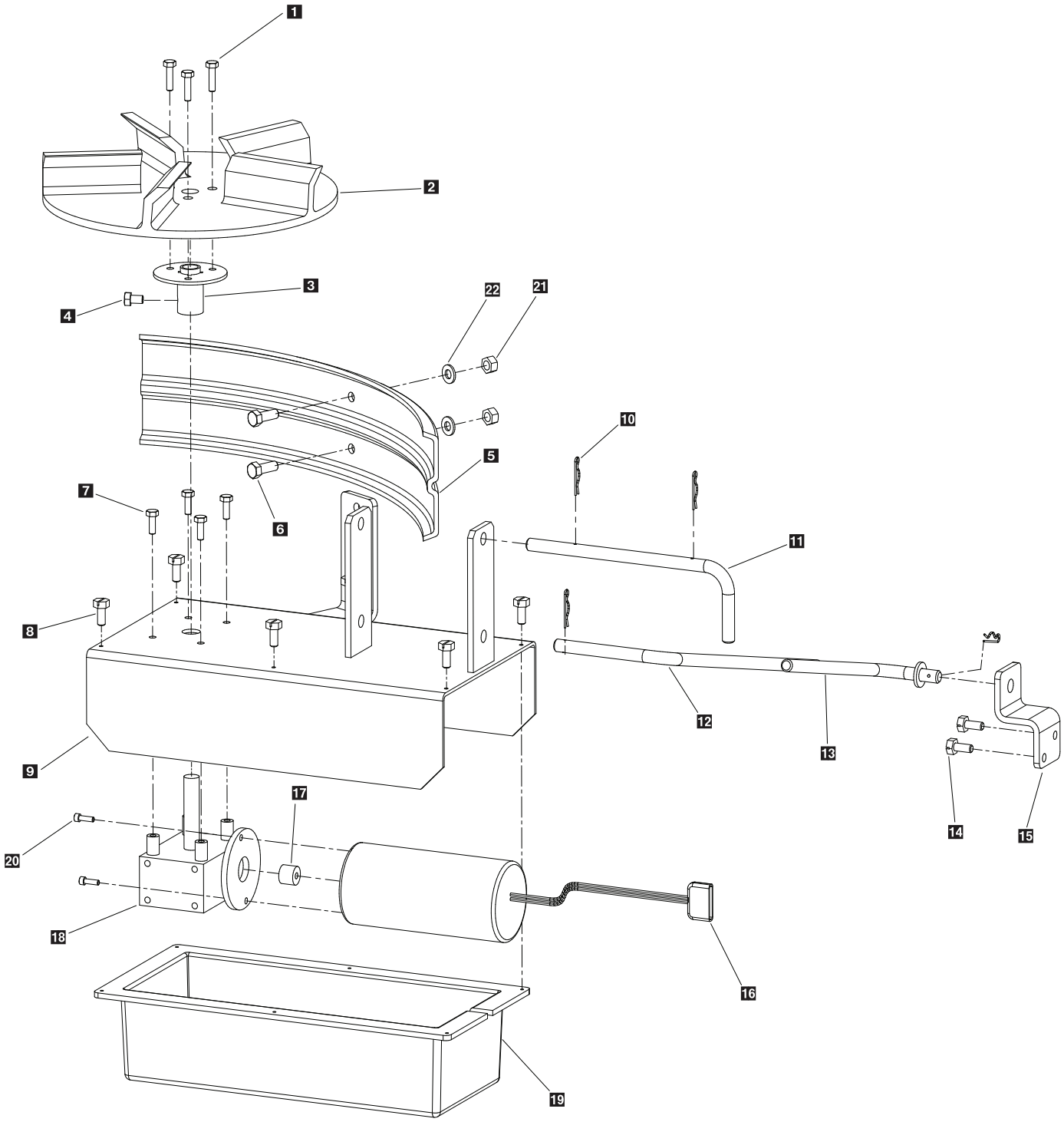

Rev. 05

L1186 © Trynex International 2009

Spinner Drive Assembly Parts Breakdown

Model # SP-2400

Key	Part No.	Description	Qty.
1	D6854	1/4-20 x 1" HWH Serrated	3
2	D6823	Urethane Spinner	1
3	D5718	Spinner Mounting Hub	1
4	D6133	5/16-18 x 1/2" Hex Bolt	1
5	D6327	Spinner Deflector	1
6	D4121	3/8"-16 x 1" HHCS	2
7	D6131	1/4-20 x 1/2" SS HWH Serrated TCS	4
8	D6877	#8 x 3/4 Self Driller HWH	6
9	D5721	Spinner Drive Enclosure	1
10	D4135	5/16 Hair Pin Clip	4
11	D5739	Spinner Drive Pin	1
12	D5741	Long Leveler Rod	1
13	D5740	Short Leveler Rod	1
14	D6447	5/16" x 1" Self Driller	2
15	D5738	Leveler Mount Bracket	1
16	D5722	Spinner Motor	1
17	D6232	Motor Coupler	1
18	D5723	Spinner Transmission	1
19	D5715	Spinner Motor Cover	1
20	D6172	#10-32 x 5/8" Serrated Flange Bolt	2
21	D4124	3/8" Lock Nut	2
22	D4125	3/8" Flat Washer	2

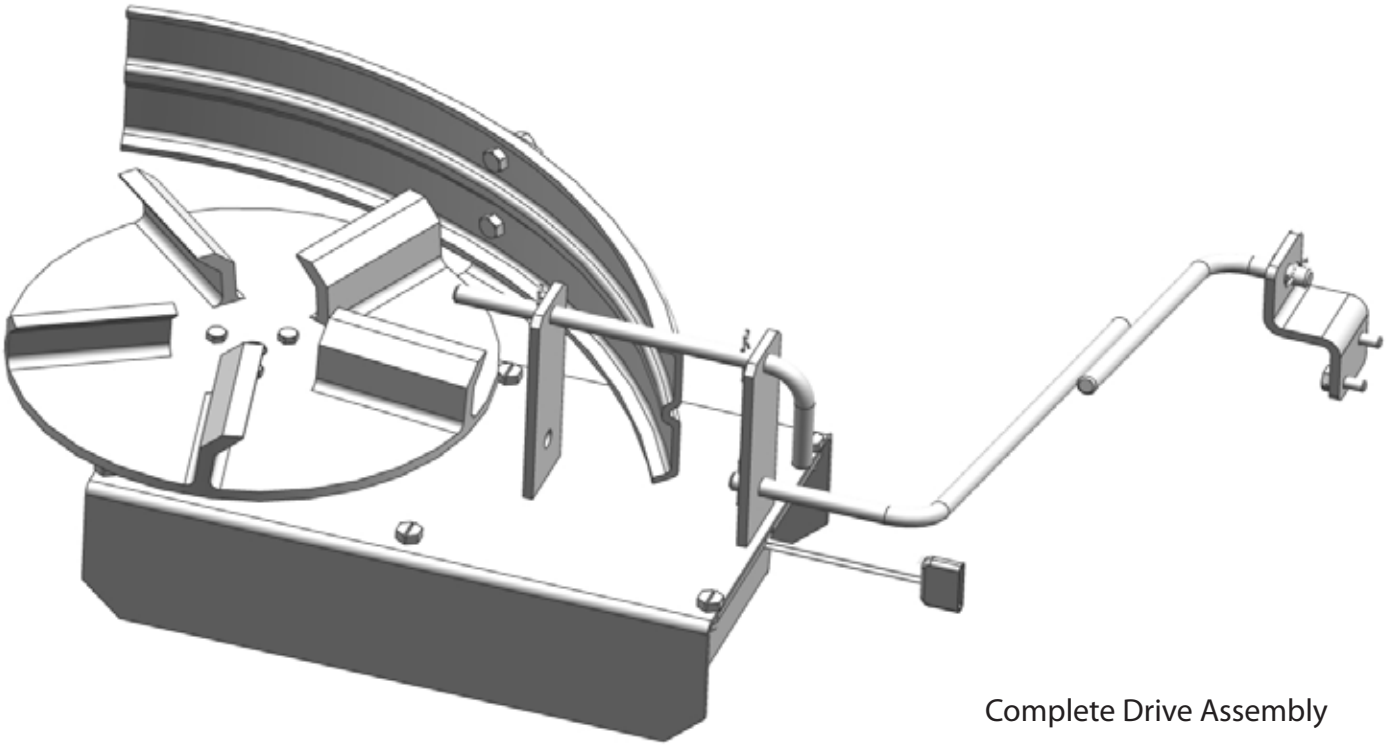

Complete Drive Assembly

D5707

Hopper Assembly Parts Breakdown

Model # SP-2400

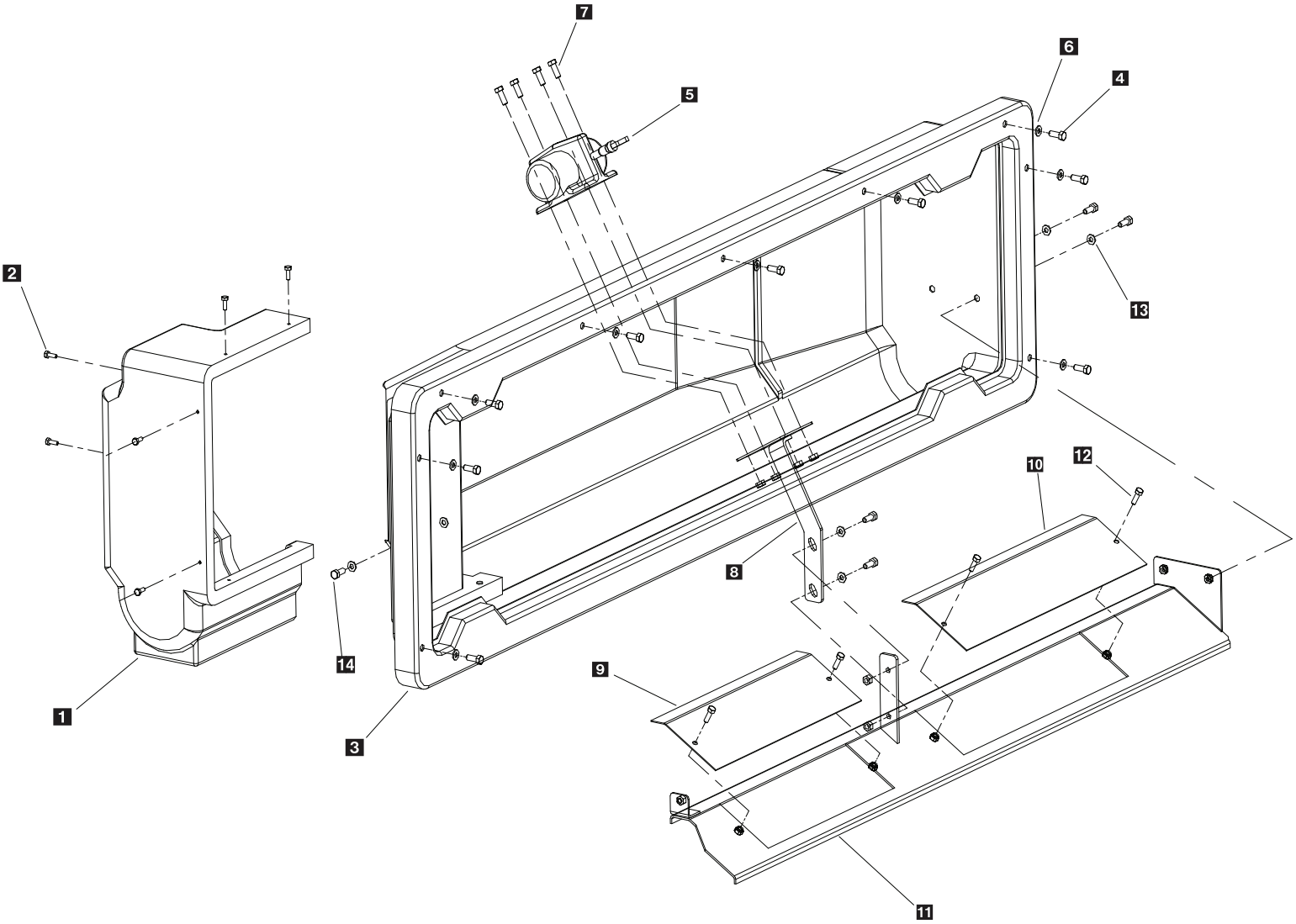

 © Trynex International 2009

Hopper Assembly Parts Breakdown

Model # SP-2400

Key	Part No.	Description	Qty.
1	D 5710	Hopper Auger Motor Cover	1
2	D 6131	1/4-20 x 1/2" SS HWH Serrated TCS	6
3	D 5700	RTG Hopper	1
4	D 5724	3/8-16 x 2-3/4 HHCS	9
5	D 6515	Heavy Duty Vibrator	1
6	D 4125	3/8" Flat Washer	11
7	D 4122	3/8-16 x 1-1/2 HHCS	4
8	D 5711	Vibrator Link Arm	1
9	D 5713	Short Baffle Plate	1
10	D 5714	Long Baffle Plate	1
11	D 5712	Interior Main Baffle Support Frame	1
12	D 6133	5/16 x 1/2" HHCS SS	4
13	D 6165	5/16 Flat Washer	3
14	D 4121	5/16-18 x 1" HHCS SS	3

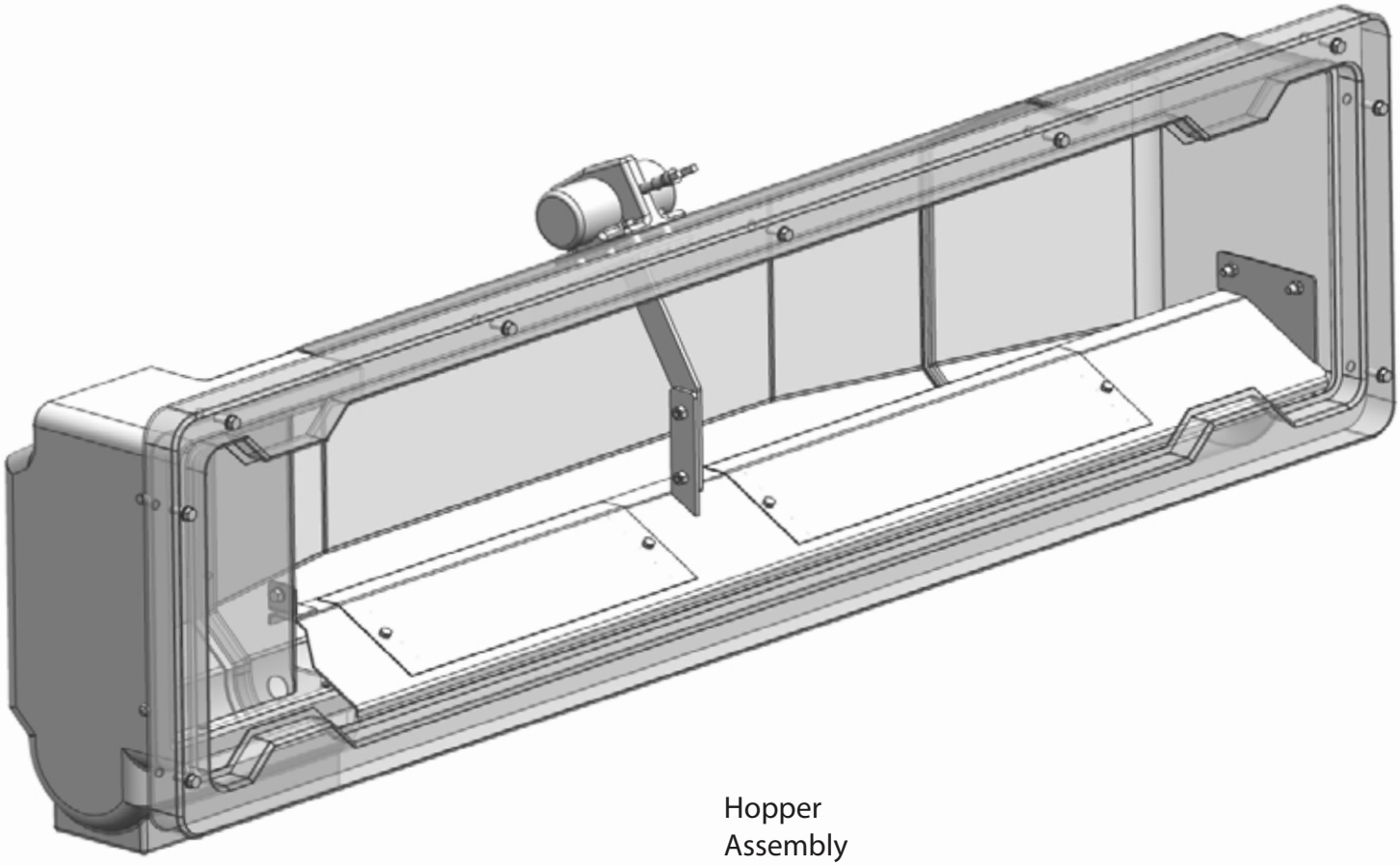

Hopper
Assembly

Frame Assembly Parts Breakdown

Model # SP-2400

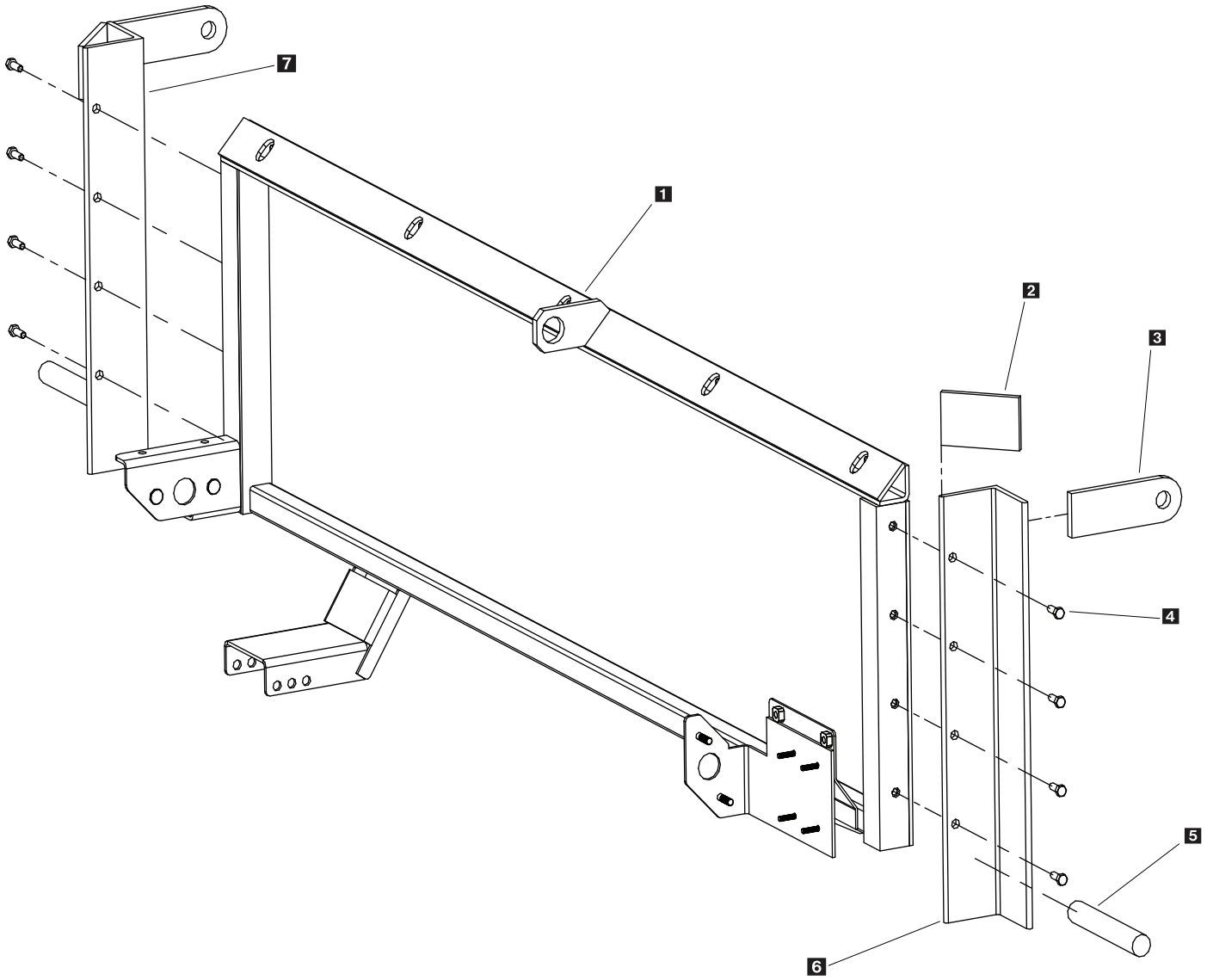

Rev. 05

L1186 © Trynex International 2009

Frame Assembly Parts Breakdown

Model # SP-2400

Key	Part No.	Description	Qty.
1	D 5705	2400 Frame Weldment	1
2	D 5736	Upper Gussett	2
3	D 5728/29	Upper Pin Bracket 1.125 & 1.0	2 ea.
4	D 4122	3/8-16 x 1-1/2 HHCS	8
5	D 5730/31/32	Lower Pin 1.25, 1.0, .750	2 ea.
6	D 5735	Right Hand Main Bracket	1
7	D 5734	Left Hand Main Bracket	1

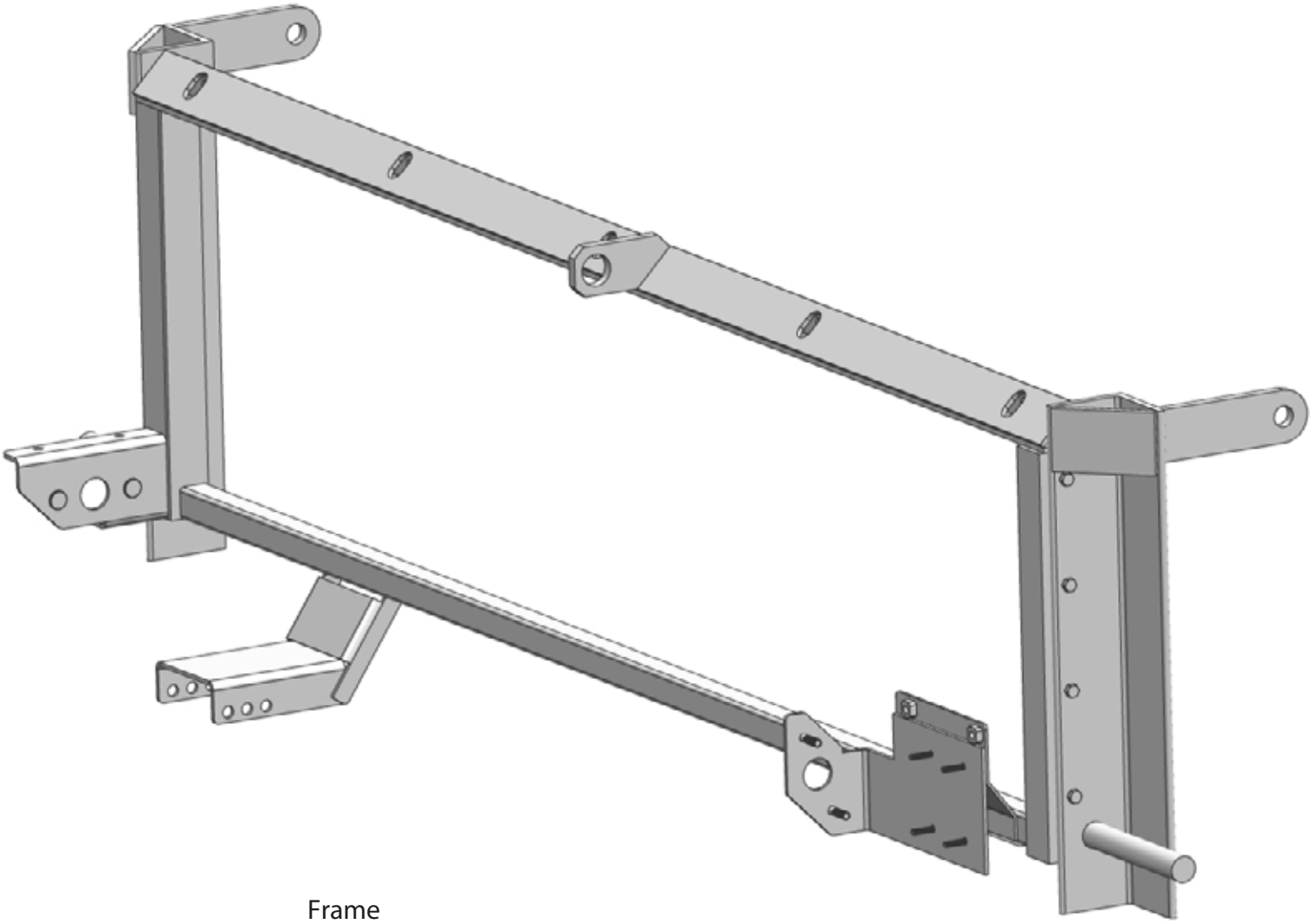

Frame
Assembly

Vehicle Harness Wiring Instructions

Model # SP-2400

Step 1: Take harness assembly and route from the rear of the vehicle to the front. Route harness along frame and attach to frame holes and frame supports. It is not recommended to attach to fuel or brake lines for obvious reasons. Do not route close to exhaust system or engine, even though Snowex uses high temperature wiring. It still could melt under extreme heat and short the spreader electrical system as well as the vehicle electrical system.

Step 2: Mount rear plug above hitch plate using supplied bolts, locate between hinges **(important)**. Make sure wiring and plug are clear of dump body pinch points. Apply a small amount of dielectric grease to contacts.

Step 3: Secure harness from the rear to the front using heavy duty ty-wraps or frame clips along the frame and lighter duty ty-wraps everywhere else.

Step 4: Drill a 1-1/4 hole in the firewall or use existing access hole **(check to make sure you are clear on the other side you intend to drill)**. Route connector and harness through hole. The power harness from control box to battery will need to be routed from the inside of the cab to the battery – this results from the large amperage connector. Route leads with lugs to battery, do not connect power at this time.

Step 5: Connect harness to the back of the controller and mount to a suitable location. NOTE: You may want to contact customer before mounting controller as some prefer not to have holes drilled into the dashboard. Ty-wrap loose controller harness and move to the engine compartment. Do not mount close to any heater vents.

Step 6: Connect power leads to the battery: Red + Positive, Black – Negative, always connect to the primary battery if using a dual battery system, secure loose loom to any other large or medium vehicle harness with medium duty ty-wraps; this will secure wiring harness.

Step 7: Push the ON/OFF button on the controller to check for power, when that has been confirmed turn power OFF. The electrical portion of the installation is complete.

Work Light Wiring Instructions

Step 1: Take light kit harness and route from the rear of the vehicle (left side) to the front. Follow main spreader wire route into vehicle cab and locate next to control mounting position.

Step 2: Mount rear power plug next to main spreader power plug. Install work light onto spreader (see fig. 1 below) and also connect harness adapter to light assembly. Do not connect light adapter to main vehicle harness at this point.

Step 3: Attach Vehicle harness (pos +) lead to supplied switch. Next attach (pos +) lead coming off main control input power lead to switch. The final connection will be to connect the (neg-) wire from the vehicle harness to the main control input power lead. Both the (pos +) and (neg -) connection points will be male/female insulated spade terminals.

Step 4: Connect work light adapter to vehicle plug, test work light by switching toggle on/off.

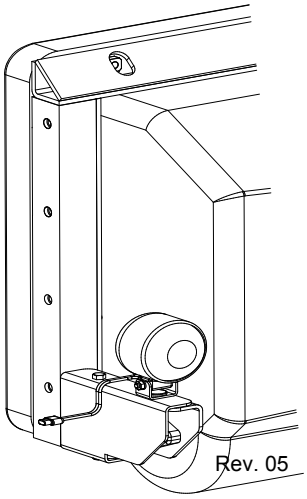

Fig 1.

IMPORTANT: Do not modify harness length. Any modifications will void warranty.

 © Trynex International 2009

Electrical System Parts Breakdown

Model # SP-2400

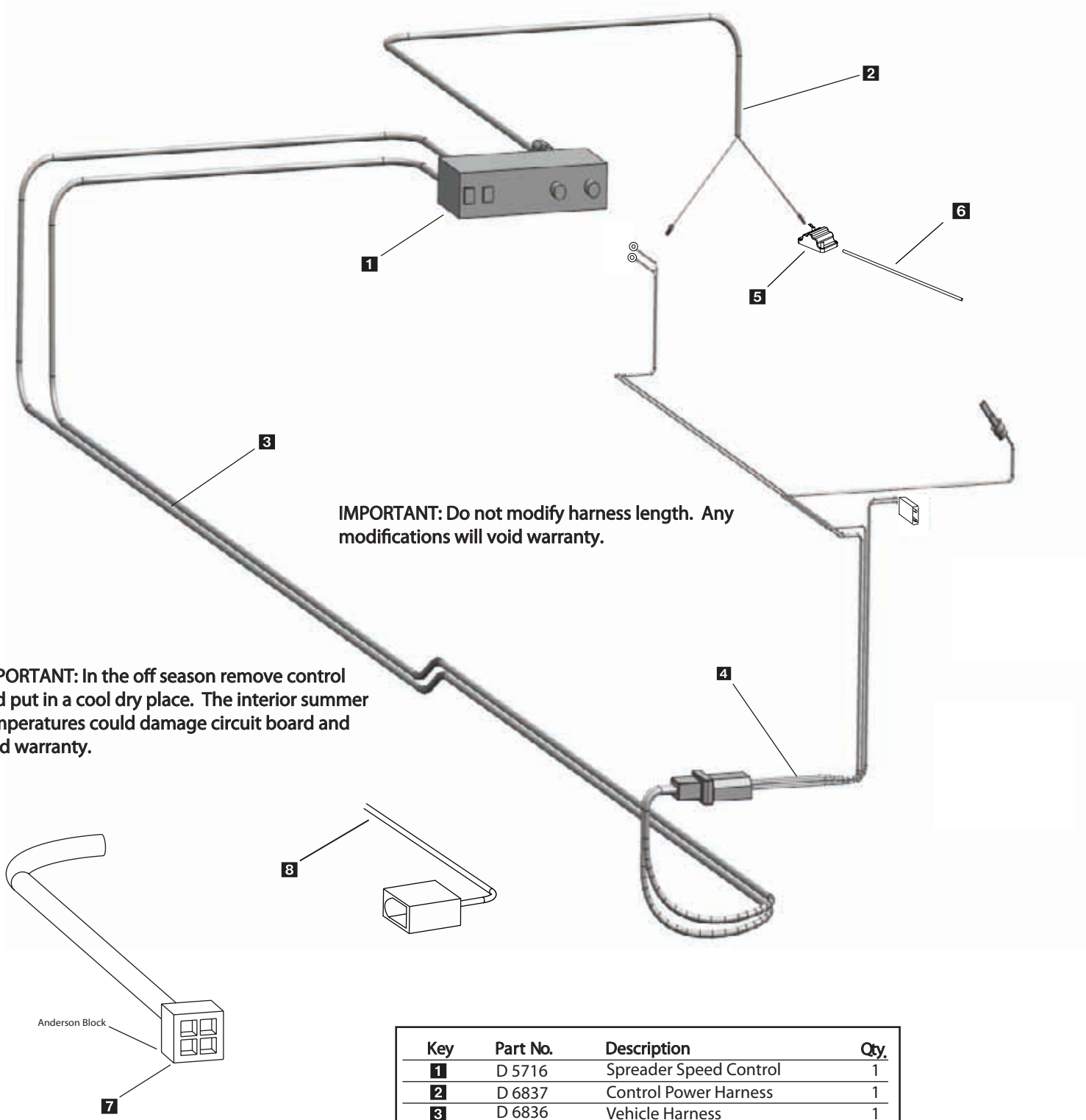

IMPORTANT: Do not modify harness length. Any modifications will void warranty.

IMPORTANT: In the off season remove control and put in a cool dry place. The interior summer temperatures could damage circuit board and void warranty.

Key	Part No.	Description	Qty.
1	D 5716	Spreader Speed Control	1
2	D 6837	Control Power Harness	1
3	D 6836	Vehicle Harness	1
4	D 5708	Spreader Harness	1
5	D 6839	6 Ga. Breaker wire	1
6	D 6851	100 Amp Resetable Breaker	1
7	D 6170	Anderson Connector With Leads	1
8	D 6841	Vehicle Harness Dust Cap	1

© Trynex International 2009 L1186

Controller Wiring Diagram

Model # SP-2400

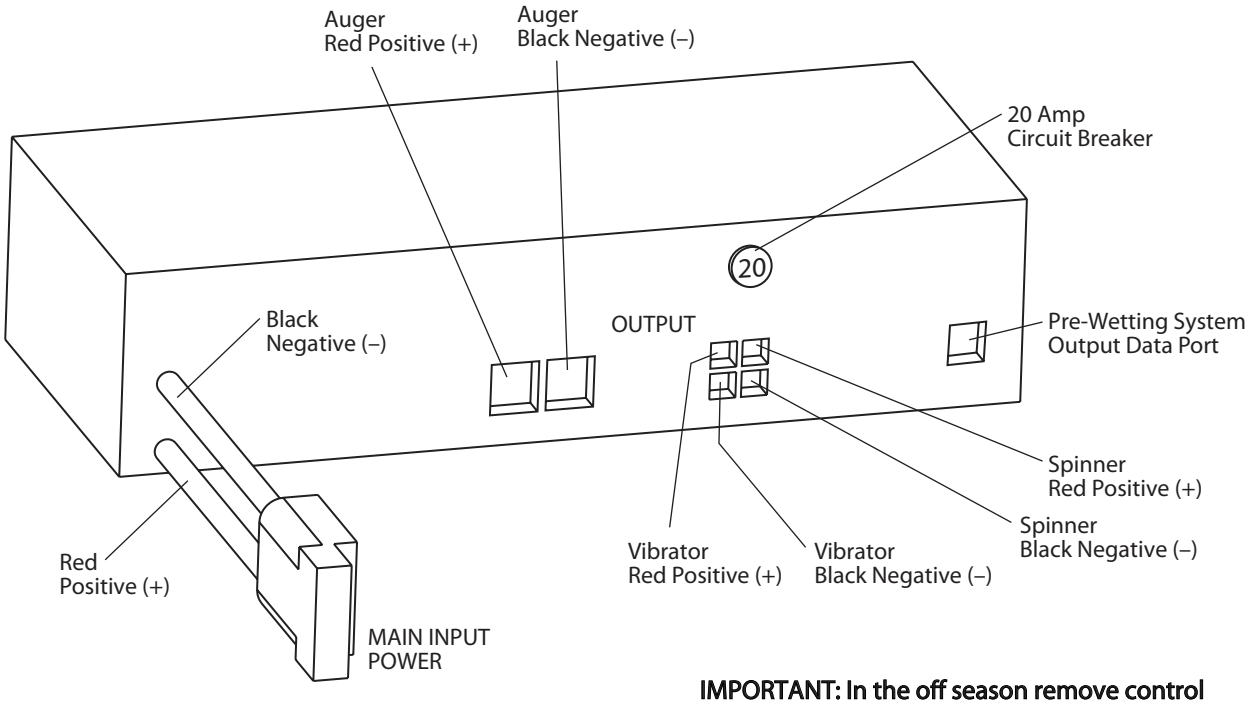

IMPORTANT: In the off season remove control and put in a cool dry place. The interior summer temperatures could damage circuit board and void warranty.

Control Power Cable

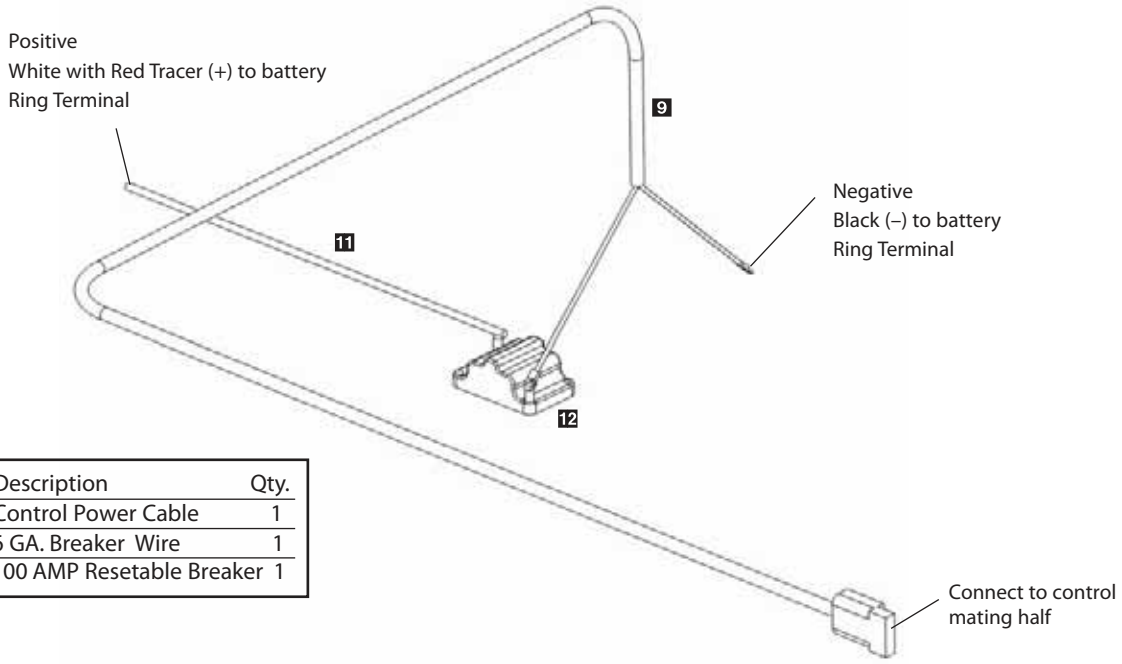

Key	Part No.	Description	Qty.
9	D 6837	Control Power Cable	1
11	D 6839	6 GA. Breaker Wire	1
12	D 6851	100 AMP Resetable Breaker	1

* NOTE:

A) Leads must only be attached to battery.

B) 100 Amp breaker must be inserted.

L1186 © Trynex International 2009

Spreader Power Harness Circuit Diagram

Model # SP-2400

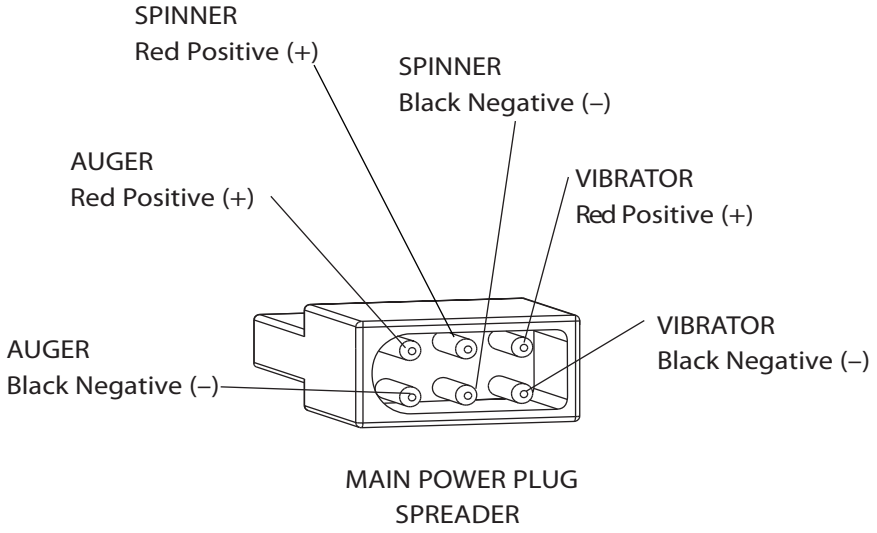

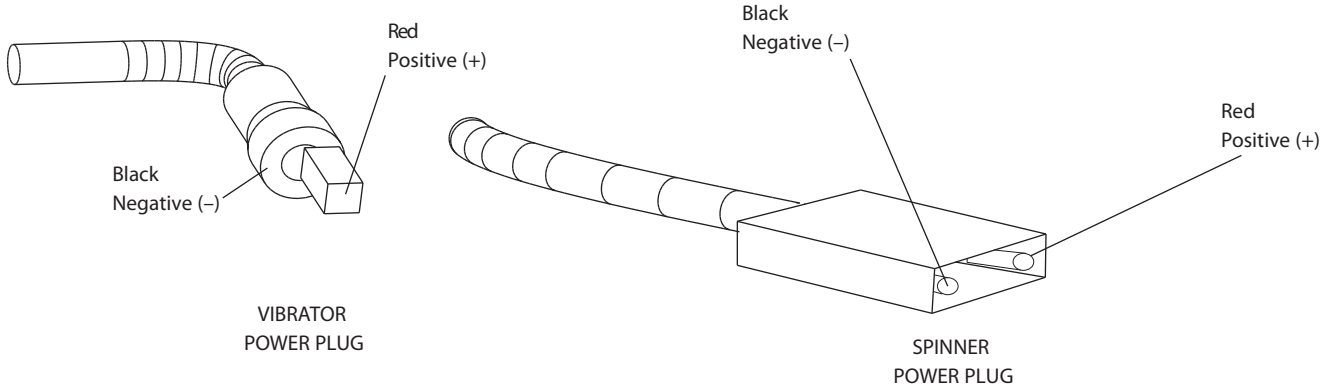

Vehicle Harness Circuit Diagram

Model # SP-2400

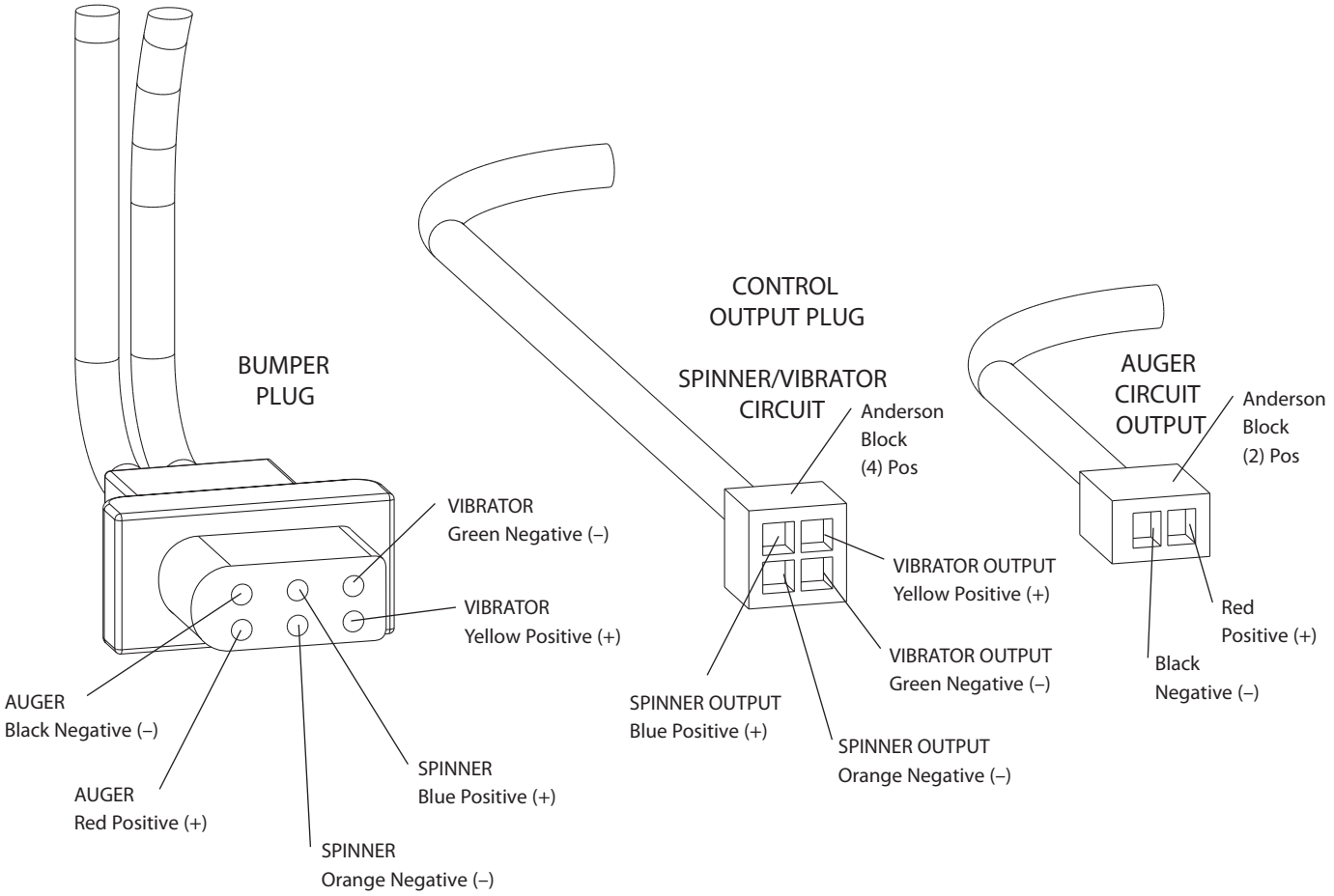

* NOTE: Reference Bumper Plug for Color Code

L1186 © Trynex International 2009

Mounting System Exploded View

Model # UMK-175

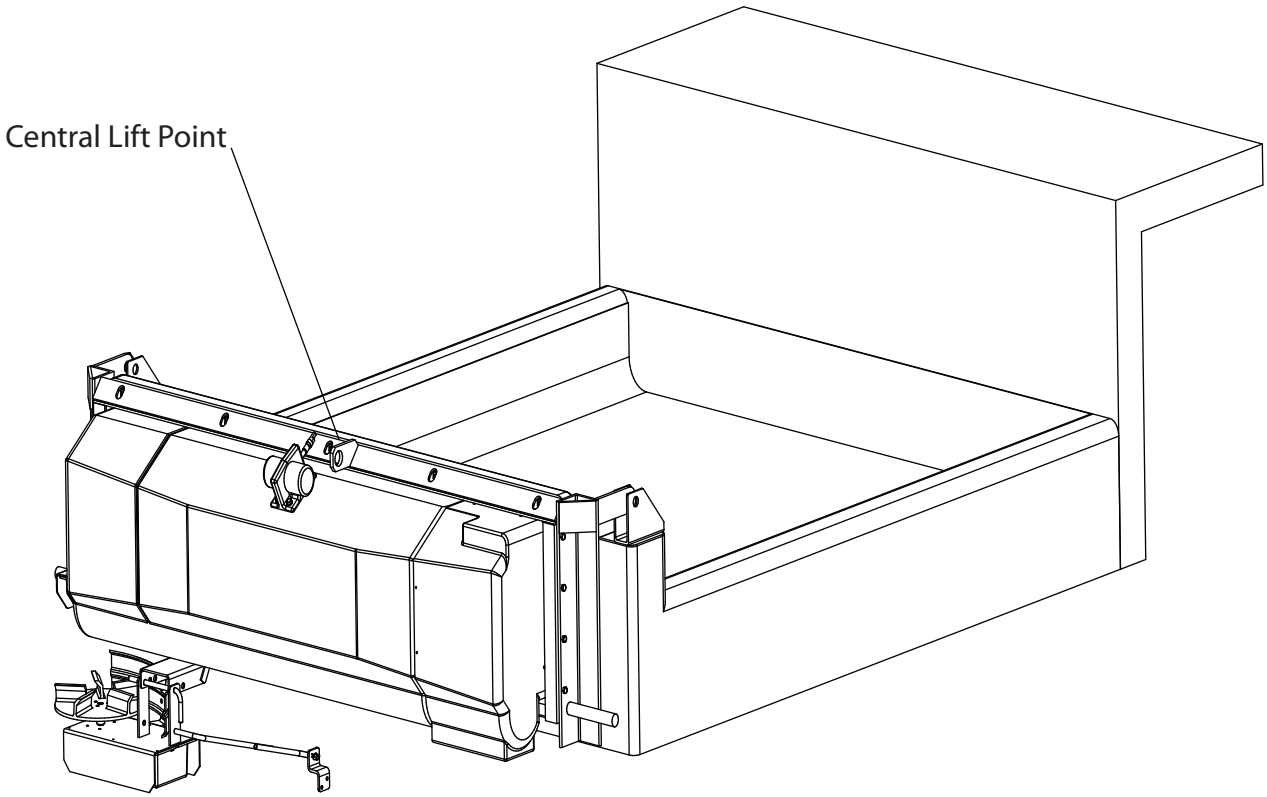

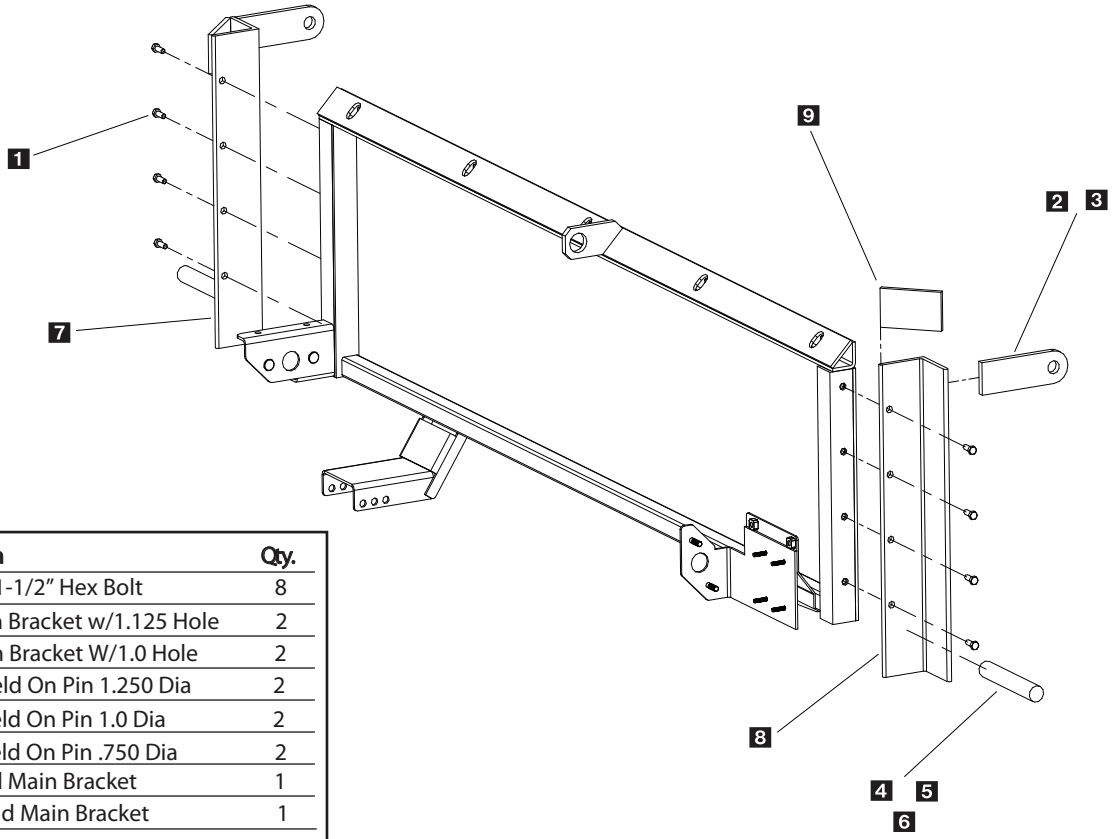

Key	Part No.	Description	Qty.
1	D 4122	3/8"-16 x1-1/2" Hex Bolt	8
2	D 5728	Upper Pin Bracket w/1.125 Hole	2
3	D 5729	Upper Pin Bracket W/1.0 Hole	2
4	D 5730	Lower Weld On Pin 1.250 Dia	2
5	D 5731	Lower Weld On Pin 1.0 Dia	2
6	D 5732	Lower Weld On Pin .750 Dia	2
7	D 5734	Left Hand Main Bracket	1
8	D 5735	Right Hand Main Bracket	1
9	D 5736	Upper Gussett	2

Mounting Instructions

Model # UMK-175

NOTE: Pay special attention when drilling or clamping dissimilar metals to aluminum bodies. Galvanic corrosion can occur if not handled properly. Contact vehicle manufacturer for recommended practices.

Step 1: Use centrally located lifting point on spreader frame. Hang spreader in center of dump body opening, (note) spreader opening must be level with dump floor.

Step 2: Using bolts provided in kit, mount left and right main angle to spreader frame.

Step 3: Mark and trim angles to appropriate width to match tailgate, remount angles to spreader frame.

Step 4: Using correct pin size provided in kit for lower latch pin, measure and cut pin to correct length. Clamping pins in correct location, tack weld pins to angles securely and lock lower hinge point.

Step 5: Using correct pin/ears provided for upper hinge point, measure and cut to correct length. Clamping ears in correct location, tack weld securely to the left and right main angles (see page 8-23) and secure upper hinge point.

Step 6: Double check that spreader will remove and install with ease.

Step 7: If using ears for upper hinge point support, upper gussetts must be welded directly behind mounting ears. (see page 8-23)

Step 8: Complete welding pins and ears to angle fully.

Step 9: Remove angles from spreader for paint and reinstall.

Mounting Instructions for self leveling spinner bracket

Step 1: Secure long leveling rod D5741 to spinner enclosure through bottom hole in bracket with hair pin clip through hole in pin (see fig 1).

Step 2: Mount drive leveling bracket D5738 to frame rail 4" below center of hinge. Weld or bolt in place (see fig 2).

Step 3: Connect D5740 short leveling rod to drive leveling bracket with hair pin clip. Align both rods next to each other (see fig2) and weld togther.

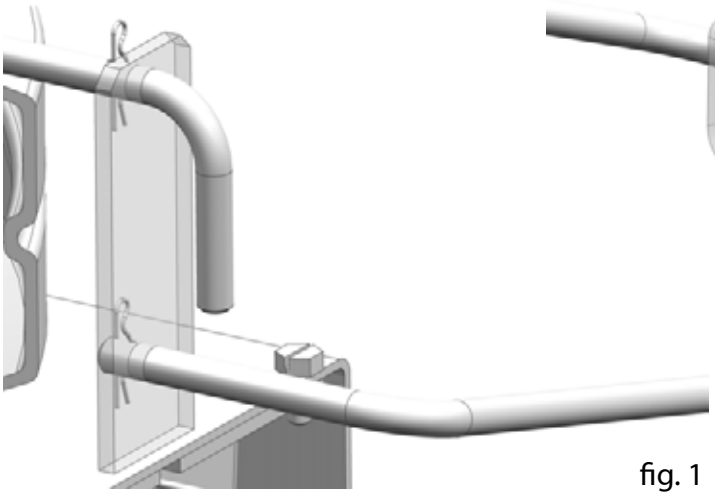

fig. 1

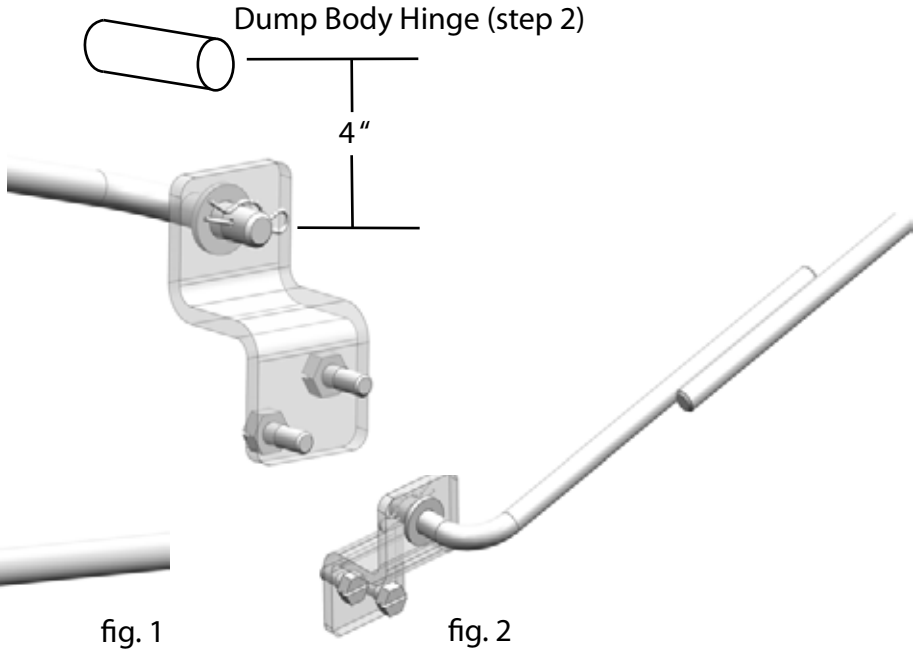

fig. 2

© Trynex International 2008

Work Light System Parts Breakdown

Model # SP-2400

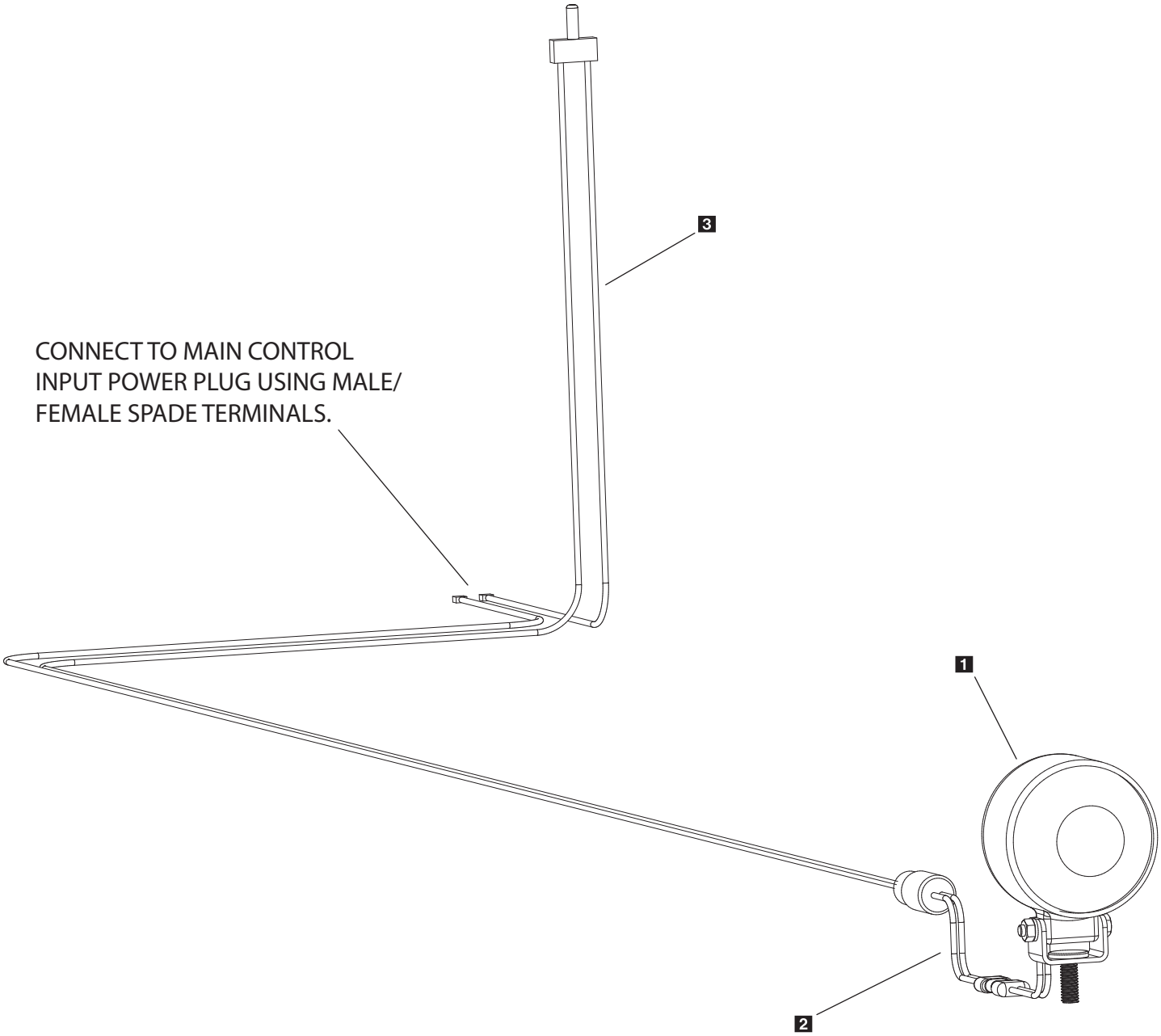

Key	Part No.	Description	Qty.
1	D 6784	Work Light Assembly	1
2	D 5726	Work Light Adapter	1
3	D 5719	Vehicle Harness W/Switch	1

SP-2400 INTERIOR BAFFLE and INVERTED-V INSTRUCTIONS

- The SP-2400 uses a multi-function baffle system over the auger area.
- This twin baffle design is used to reduce load on the auger drive train which controls amperage load to the electrical system. It must not be removed unless servicing the unit.
- There are two covers provided, one long and one short. They can be removed in different combinations depending on the material type or moisture content. Ultimately they aid in controlling material flow to the auger area; however for wet sand both baffles should be removed.
- The baffle system is also connected to the vibrator link arm assembly to assist with material flow. Make sure vibrator bolts and link arm hardware are tight before operating spreader.
- WARNING: Always disconnect power source before attempting to remove material baffle.

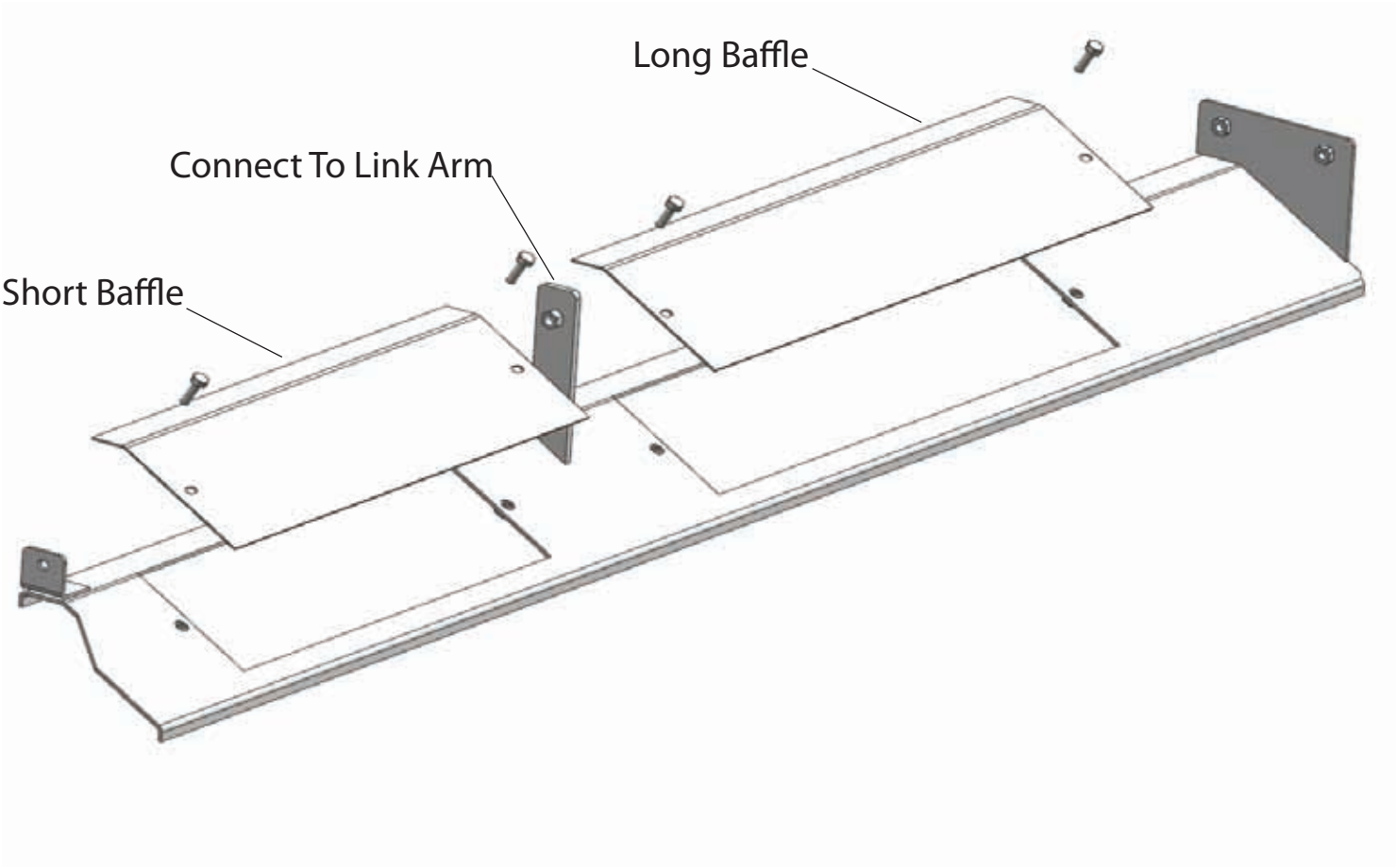

© Trynex International 2009

PREPARATION

CAUTION – Sweep area clear of foreign objects or obstacles that could cause personal injury. Keep other persons, children, or animals out of the area to be spread.

SPREADER LOADING

WARNING – Do not overload vehicle. Use chart below to calculate weight of material. Weights of material are an average for dry materials.

Material	Weight Per Cubic Ft.
Rock Salt	35-40 lbs.
Sand/Salt Mix	95-120 lbs.

- Be sure to comply with manufacturer's maximum gross vehicle weight ratings.
- Warning– Never leave materials in hopper for long periods of time as salt is hygroscopic and will attract atmospheric moisture and harden up. When spreading sand mix, a 1:1 ratio for Sand/Salt mix is recommended to prevent the material from freezing.

SPREADING TIPS

- Never exceed 10 m.p.h. when spreading.
- For a wider pass, increase spinner speed.
- For a heavier pass, drive slower, or increase auger speed.
- Never operate spreader near pedestrians.
- Spread ice melters with the storm to prevent unmanageable levels of ice.
- Calculate spread pattern when near vegetation.

2400 CONTROL OPERATION

- The Dual Variable Speed Control has dual finger-tip dials for maximum performance, digital system status with warning protection and built-in Vibrator Switch.
- To start, press power switch on controller and spreader will accelerate to speed set on spinner and auger dials.
- To stop, press power switch on controller to off position.
- Speed of auger and spinner may be adjusted separately to get desired flow and spread distance from spreader.
- The Vibrator Switch is needed for dense material or to increase the flow to the auger. This eliminates bridging of material in hopper.

WARNING PROTECTION

- If audible beeping occurs, read display to identify problem. If display reads “OL” (overload) or “OH” (overheat), shut controller down and carefully clear jammed auger. If display reads “E1“ this means there is a dead short in system. Do not use until problem is corrected. If display reads “E 0” this means that the motor is not getting any power. Check all connections If display reads “LB” the vehicle battery is extremely low (possibly caused by a poor or corroded connection) and could damage the system.
- If there are any problems while operating the spreader, refer to Troubleshooting Guide.

AUTO-REVERSE “AR” FUNCTION

- If your controller displays “OL” this could indicate a jammed auger.
- To engage the Auto-Reverse “AR” function:

  Step 1: Shut the Main Power Switch OFF for 3 seconds.

  Step 2: Turn the Main Power Switch ON. When the machine starts back up the “AR” sequence will automatically start and the auger will reverse for several rotations to clear the jam.

- After a pause of several moments, the auger will automatically return to correct rotation.
- If the jam is still not cleared, the controller will again display “OL”.
- You may repeat Steps 1 & 2 for a second and third time.
- If after the third try the controller displays “OL” — you must extract the material that is causing the problem.
- Follow all warning directions when clearing jams.

© Trynex International 2009 L1186

Troubleshooting

Model # SP-2400

Whenever service is necessary, your local SnowEx Dealer knows your Spreader best. Take your Spreader to your local dealer for any maintenance or service needs on your unit. If this is not possible, the Troubleshooting Guide below may assist you in identifying the problem.

Warning: First read all warning instructions and safety messages before servicing your spreader.

Preliminary Checks
- Be sure all electrical connections are tight and clean.
- Be sure nothing is jammed in the hopper.

PROBLEM	POSSIBLE CAUSE	SOLUTION
Motor doesn't run.	Loose electrical connections.	Check all connections.
	Blown Fuse.	Replace fuse.
	Motor Seized.	Replace motor.
Controller shut down.	Jammed auger.	Carefully clear jammed material.
	Poor electrical connections.	Clean or replace connectors. Use dielectric grease.
	Electrical short.	Check electrical connections. Check for bare wires.
	Controller failure.	Replace controller.
Material not flowing from hopper.	Empty hopper.	Fill hopper.
	Wet material.	Replace with dry material.
	Frozen or coarse material.	Replace material.
	Spinner not turning.	Check drive assembly.
	Auger loose on shaft.	Tighten locking bolt on the side of the auger. There is a flat machined on the driver shaft. Align the auger with this flat and tighten the bolt.
	Vibrator not working.	Replace vibrator
Audible alarm beeping and display shows OL or OH.	Jammed auger, overload shut down.	Turn off for three seconds, then restart. If shut down continues, turn off controller. Clear debris and lumps from auger areas.
Audible alarm beeping display shows E1.	Short in system.	Turn off. Do not use until problem is corrected.
Audible alarm beeping display shows EO.	Motor is not getting power.	Turn off. Check all connections.
Audible alarm beeping display shows LB.	Vehicle battery is extremely low, or a poor connection exists.	Turn off. Charge battery.

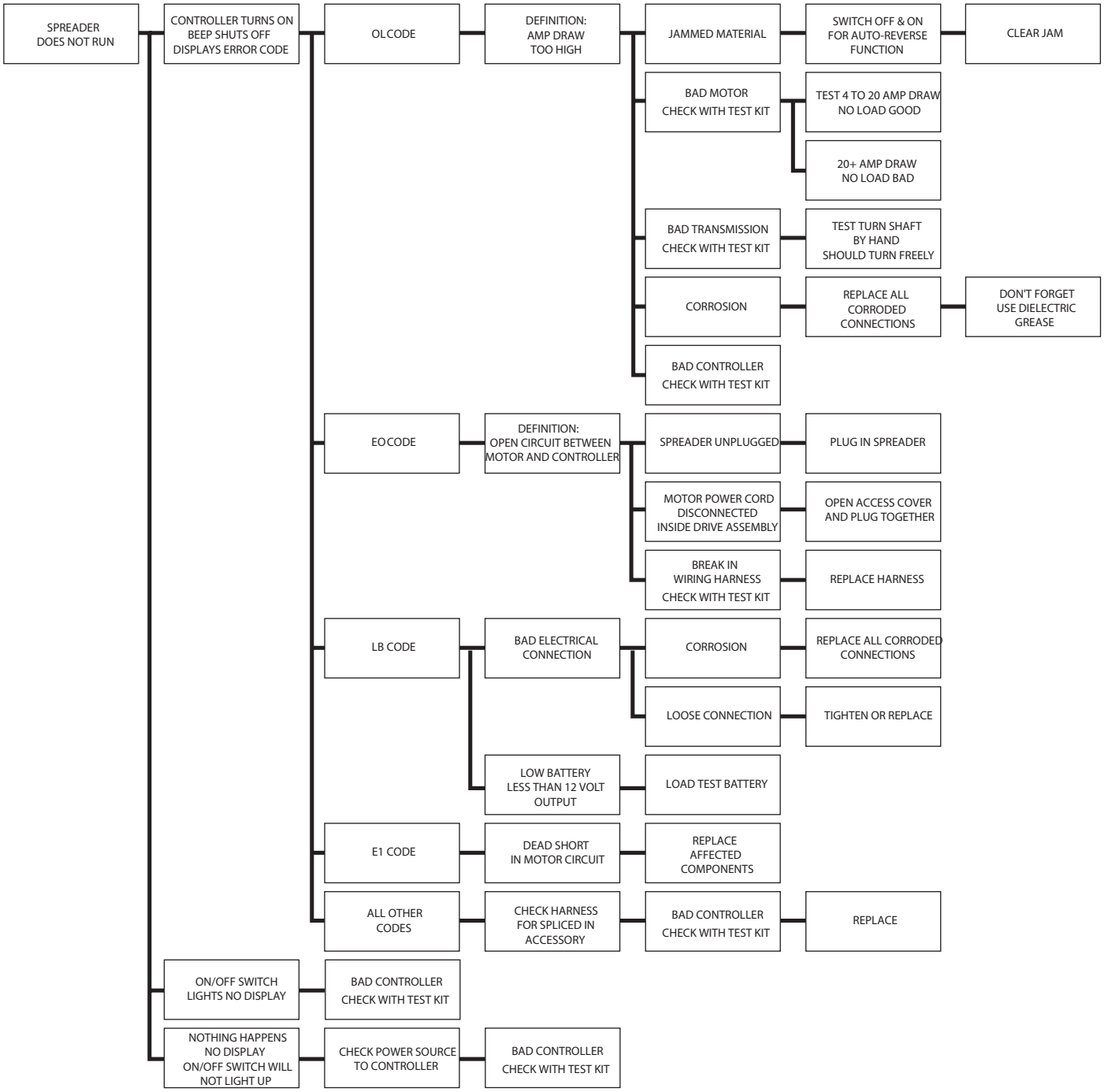

© Trynex International 2009 L1186

Troubleshooting Material Flow

Model # SP-2400

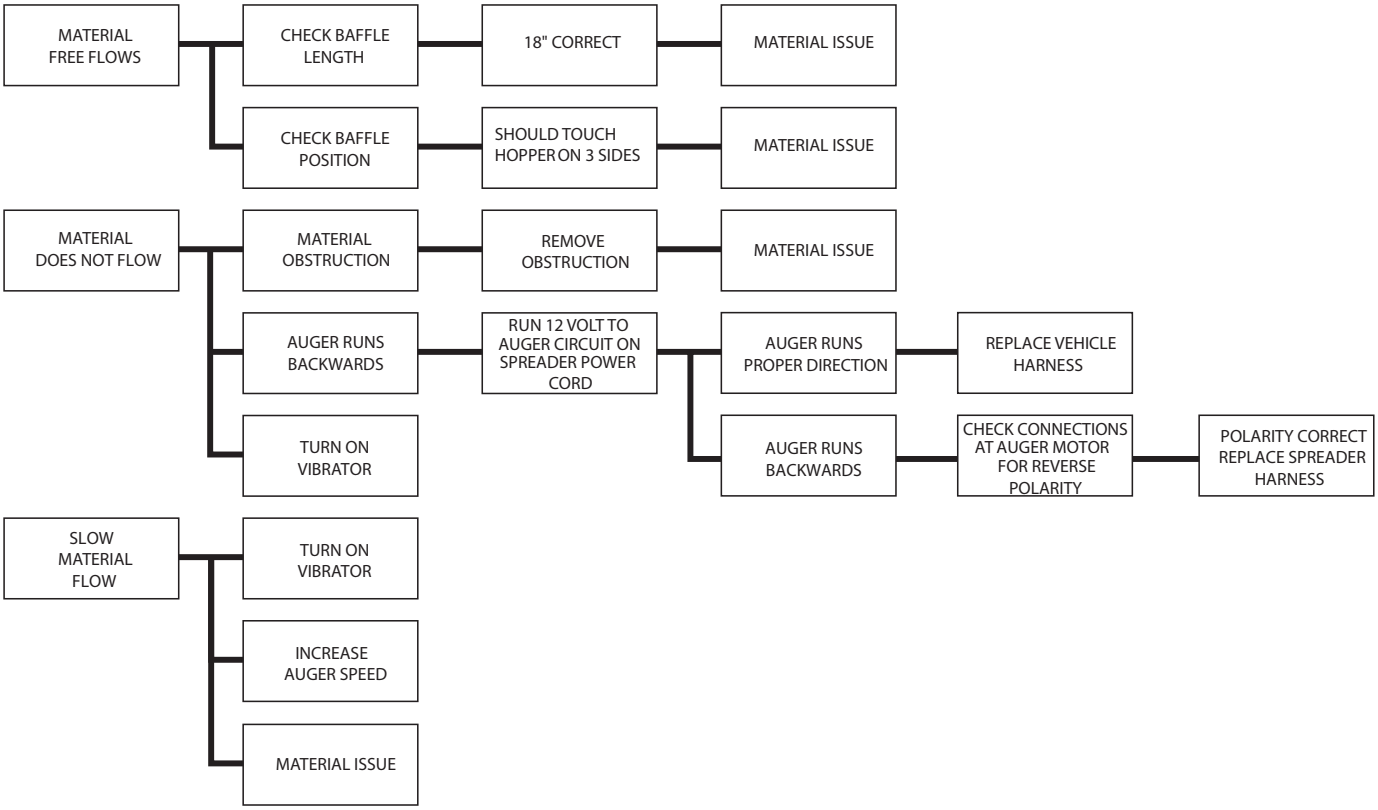

* Spreader capable of speading most granular bulk material.

- WARNING – When servicing is necessary, perform it in a protected area. Do not use power tools in rain or snow because of danger of electrical shock or injury. Keep area well lighted. Use proper tools. Keep the area of service clean to help avoid accidents.
- WARNING – Disconnect electricity to spreader before servicing.
- CAUTION – The controller is a solid state electronic unit and is not serviceable. Any attempt to service will void warranty.
- CAUTION – There are no serviceable parts in the motor/transmission assembly. Any attempt to service will void warranty.
- CAUTION – When replacing parts use only original manufacturer's parts. Failure to do so will void warranty.
- Use dielectric grease on all electrical connections to prevent corrosion at the beginning and end of the season and each time plugs are disconnected.
- Gently wash unit after each use to prevent material build-up and corrosion.
- CAUTION – When pressure washing motor enclosure area, stay at least 36" away from all electrical items.
- Paint or oil all bare metal surfaces at the end of the season.
- Apply small amount of light oil to latches as needed.
- If motor cover is removed for any reason, use silicone sealant to ensure weather proofing of enclosure.
- Grease bearings after every 20 hour's use.
- After first use, tighten all nuts and bolts on spreader and mount.
- WARNING: Never remove spreader with material in hopper.
- ATTENTION: Store control in cool dry place during the off season.
- CAUTION – Spinner motor is not designed for continuous duty. Allow motor to cool between long cycle times.
- CAUTION – Vibrator is not designed for continuous duty. Allow motor to cool between long cycle times.
- CAUTION – Do not modify vehicle or spreader wiring harness. Doing so will void product warranty.

© Trynex International 2009 L1186

Determining Vehicle Payload

Material Type	Example: Coarse Salt – Dry				
Equipment installed when vehicle was weighed	SP-2400				
Front Gross Axle Weight Rating (RGAWR)					
Rear Vehicle Weight Rating (GVWR) (lb.)	8600				
Gross Vehicle Weight (GVW) (lb.) (empty)	– 6500	–	–	–	–
Payload Available (lb.)	= 2100	=	=	=	=
Material Weight (lb./cu. yd.)	÷ 1431	÷	÷	÷	÷
Maximum Volume (cu. yd.)	= 1.47	=	=	=	=
Maximum Height (approximate) (in.)	24"				
Loaded Front Gross Axle Weight (FGAW) (lb.)					
Loaded Rear Gross Axle Weight (RGAW) (lb.)					
Loaded Gross Vehicle Weight (GVW) (lb.)					

Torque Chart

When tightening fasteners, refer to the Torque Chart below for the recommended fastener torque values.

Recommended Fastener Torque Chart (ft.-lb.)

SIZE	SAE Grade 2	SAE Grade 5	SAE Grade 8
1/4-20	6	9	13
5/16-18	11	18	28
3/8-16	19	31	46
3/8-24	24	46	68
7/16-14	30	50	75
1/2-13	45	75	115
9/16-12	66	110	165
5/8-11	93	150	225
3/4-10	150	250	370
7/8-9	202	378	591
1-8	300	583	893

Metric Grade 8.8 (ft.-lb.)

SIZE	TORQUE	SIZE	TORQUE
M 6	7	M 12	60
M 8	17	M 14	95
M 10	35	M 16	155

These torque values apply to mount assembly fasteners except those noted in the instruction.

Material Weights

Refer to the table below for the weight per cubic yard of common spreading materials.

MATERIAL	WEIGHT (lb. per cubic yard)
Fine Salt – Dry	2,025
Coarse Salt – Dry	1,431
Sand/Salt Mix – Dry (50/50)	2,700
Cinders	1,080

Limited Warranty

Snowex products are warranted for a period of two years from the date of purchase against defects in material or workmanship under normal use and service, subject to limitations detailed below. Warranty period of two years begins on the date of purchase by the original retail user.

The WARRANTY REGISTRATION CARD must be returned to the manufacturer for this warranty to become effective. This warranty applies to the original retail purchaser only. This warranty does not cover damages caused by improper installation, misuse, lack of proper maintenance, alterations or repairs made by anyone other than authorized Snowex dealers or Snowex personnel. Due to the corrosive properties of the materials dispensed by spreaders, Trynex does not warrant against damage caused by corrosion. Warranty claims by the user must be made to the dealer from where the product was purchased, unless otherwise authorized by Snowex. Snowex reserves the right to determine if any part is defective and to repair or replace such parts as it elects. This warranty does not cover shipping costs of defective parts to or from the dealer.

LIMITATION OF LIABILITY

Neither Snowex, nor any company affiliated with it, makes any warranties, representations for promise as to the performance or quality other than what is herein contained. The liability of Snowex to the purchaser for damages arising out of the manufacture, sale, delivery, use or resale of this spreader shall be limited to and shall not exceed the costs of repair or replacement of defective parts. Snowex shall not be liable for loss of use, inconvenience or any other incidental, indirect or consequential damages, so the above limitations on incidental or consequential damages may not apply to you.

NO DEALER HAS AUTHORITY TO MAKE ANY REPRESENTATION OR PROMISE ON BEHALF OF SNOWEX, OR TO ALTER OR MODIFY THE TERMS OR LIMITATIONS OF THIS WARRANTY IN ANY WAY.

 © Trynex International 2009

Warranty Registration and Customer Survey

To initiate the warranty on your new SnowEx spreader and assure prompt warranty service, please complete the following warranty registration and customer survey, sign and mail it back to the factory within 30 days of purchase.

1) Date of Purchase: _____

2) Name: _____

Address: _____

_____

Phone: _____

3) SnowEx Model Purchased: _____ Serial Number: _____

4) Is this your first Trynex Spreader? ❑ Yes ❑ No

5) What type of vehicle are you using with your Spreader?

Make _____ Model _____ Year _____

6) What type of material are you using in your spreader? _____

7) SnowEx Dealer Name: _____

SnowEx Dealer Address: _____

_____

SnowEx Dealer Phone: _____

8) Does your Trynex Dealer stock Trynex replacement Parts? ❑ Yes ❑ No ❑ I don't know

9) Do you feel your Trynex Dealer sold you the correct product for your needs/application? ❑ Yes ❑ No

10) How would you rate your overall satisfaction with your SnowEx Dealer?	❑ Very Satisfied	❑ Satisfied	❑ Somewhat Satisfied	❑ Somewhat Dissatisfied	❑ Dissatisfied	❑ Very Dissatisfied
11) How would you rate your overall satisfaction with your SnowEx Product?	❑ Very Satisfied	❑ Satisfied	❑ Somewhat Satisfied	❑ Somewhat Dissatisfied	❑ Dissatisfied	❑ Very Dissatisfied

12) Would you purchase another Trynex Product? ❑ Yes ❑ No

13) If you would like to receive E-Mail ALERTS for new products, bulletins or special promotions please supply address : _____

14) Please use the space below to convey your comments and/or suggestions.

_____

_____

_____

_____

NOTE: I have read the owner's manual and all safety precautions and I understand that this equipment could be dangerous if not operated with care and under the proper conditions.

15) Owner's signature: X _____

PLEASE FOLD AND SEAL WITH TRANSPARENT TAPE BEFORE MAILING.

© Trynex International 2009