This Manual Must Be Read Before Operating The Equipment

Owner / Operator's Manual

SnowEx®

LEADERS IN ICE CONTROL

FOR MODELS

SP-8550

TrynEx® INTERNATIONAL

Warren, Michigan 48089

800-725-8377

CUSTOMER COPY

Protected by the following patents, #6,089,478, #6,088,865, #Des.425,915 and other pending U.S. and foreign patent applications.

© Trynex International 2010

Table of Contents

Introduction 3

General Information and Registration 4

Safety Information 5-7

Blank Pages 8-9

Spreader Assembly and Exploded Views 10-17

Wiring Instructions 18

Electrical System Information 19-22

Spreader Mounting System 23-24

Blank Page 25

Spreader Operating Information 26-28

Troubleshooting Information 29-31

Spreader Maintenance 32

Determine Vehicle Payload Chart 33

Warranty 34

Have a question or need assistance?

SnowEx Customer Service

(800) 725-8377

or (586) 756-6555

Monday through Friday 8:00 AM to 4:30 PM EST

Fax: (586) 427-0552

E-Mail: customercare@trynexfactory.com

Website: www.snowexproducts.com

© Trynex International 2010

This manual has been designed for your help. It will assist you and instruct you on the proper set-up, installation and use of this spreader. Refer to the table of contents for an outline of this manual.

We require that you read and understand the contents of this manual completely (especially all safety information) before attempting any procedure contained herein.

THIS SIGN SHOULD ALERT YOU:
The Society of Automotive Engineers has adopted this SAFETY ALERT SYMBOL to pinpoint characteristics that, if NOT carefully followed, can create a safety hazard. When you see this symbol in this manual or on the the machine itself, BE ALERT! Your personal safety and the safety of others is involved.

Defined below are the SAFETY ALERT messages and how they will appear in this manual:

DANGER

(RED)
Information that, if not carefully followed,
can cause death!

WARNING

(ORANGE)
Information that, if not carefully followed,
can cause serious personal injury or death!

CAUTION

(YELLOW)
Information that, if not carefully followed,
can cause minor injury or damage to equipment.

© Trynex International 2010

CONGRATULATIONS!

The spreader you have purchased is an example of snow and ice control technology at its finest! Your spreader's innovative, self-contained design is a trademark of all Trynex products. Here's why...

SIMPLICITY: Fewer moving parts manufactured of higher quality means minimal maintenance for your SnowEx spreader.

RELIABILITY: High impact linear low density polyethelyne hopper, state-of-the-art electronic dual variable speed control, custom engineered powder coated frame, maximum torque 12 volt motor coupled to a custom engineered transmission found only on SnowEx products.

VERSATILITY: Multi-use capabilities allows spreading of a variety of materials for snow and ice control.

WARRANTY: Best in the industry, hands down! 2 Years Standard and now a 5 Year Extended (optional).

The benefits you are about to recognize are that of time, money and effort.
We welcome you to the world of Trynex Performance.

Registration

Record the following information in this manual for quick reference.

Spreader Model Number _____

Spreader Serial Number_____ Controller Serial Number _____

Date of Purchase_____

Dealer Where Purchased _____

When ordering parts, the above information is necessary. This will help to insure that you receive the correct parts.

At the right is a diagram of the ID tag. This tag on the spreader is located on the frame.

Please fill out the warranty card with all the necessary information to validate it. This will also give us a record so that any safety or service information may be communicated to you.

© Trynex International 2010

DANGER **WARNING** **CAUTION**

Before attempting any procedure in this book, these safety instructions must be read and understood by all workers who have any part in the preparation or use of this equipment.

For your safety warning and information decals have been placed on this product to remind the operator of safety precautions . If anything happens to mark or destroy the decals, please request new ones from Trynex, International.

WARNING Unit must be strapped down and locked into position before operating vehicle.

DANGER Never exceed the Gross Vehicle Weight Rating of vehicle. Failure to do so may limit a vehicles handling characteristics.

DANGER Never attempt to take a unit off a truck with material in it.

WARNING Never exceed 45 m.p.h. when loaded spreader is attached to vehicle. Braking distances may be increased and handling characteristics may be impaired at speeds above 45 m.p.h.

WARNING Never allow children to operate or climb on equipment.
Always check areas to be spread to be sure no hazardous conditions or substances are in the area.
Always inspect unit for defects: broken, worn or bent parts, weakened areas on spreader or mount.

WARNING Always shut off vehicle and power source before attempting to attach or detach or service spreader unit. Be sure vehicle/power source is properly braked or chocked.

WARNING Always keep hands, feet, and clothing away from power-driven parts. Remember it is the owner's responsibility to communicate information on safe usage and proper maintenance of all equipment.

WARNING Always make sure personnel are clear of areas of danger when using equipment. Maintain 60' distance from all bystanders when operating the spreader.

WARNING Inspect the unit periodically for defects. Parts that are broken, missing, or worn out must be replaced immediately. The unit, or any part of it cannot be altered without prior written permission from the manufacturer.

CAUTION Never use V-Maxx 8550 with foreign debris in the spreader. These units are designed to handle clean, free-flowing material.

© Trynex International 2010

WARNING Always inspect pins and latches whenever attaching or detaching spreader, and before traveling.

CAUTION Never leave material in hopper for long periods of time. Be aware that all ice melters are hygroscopic and will attract atmospheric moisture and harden up.

WARNING Remember, most accidents are preventable and caused by human error. Exercising of care and precautions must be observed to prevent the possibility of injury to operator or others!

WARNING Never operate equipment when under the influence of alcohol, drugs, or medication that might alter your judgment and/or reaction time.

WARNING Before working with the spreader, secure all loose fitting clothing and unrestrained hair.

WARNING Always wear safety glasses with side shields when servicing spreader. Failure to do this could result in serious injury to the eyes.

© Trynex International 2010

Safety and Warning Labels

Model # SP-8550

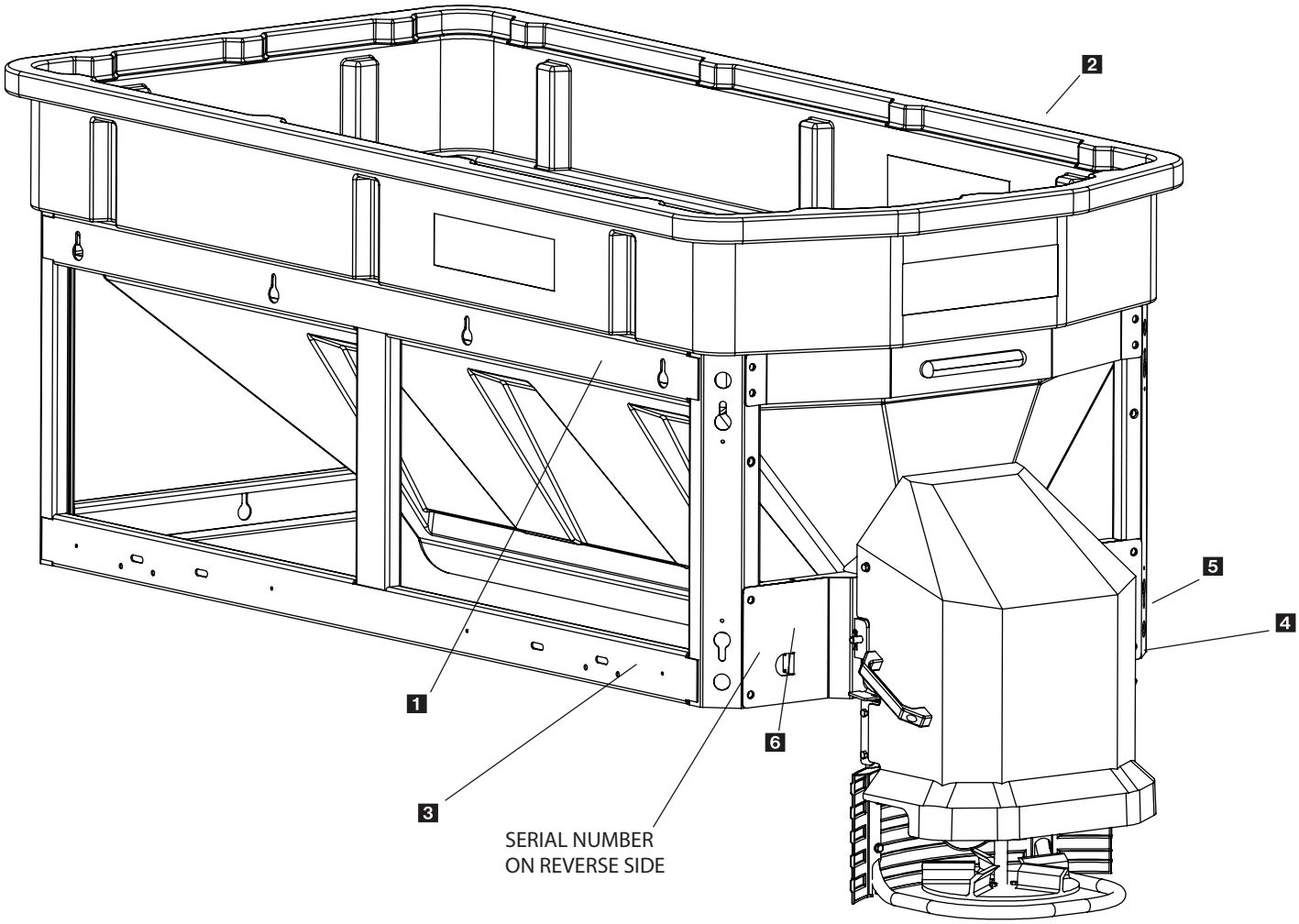

1 D 6546

2 D 6859

3 D 6545

4 D 6544

5 D 6335

6 D 6548

© Trynex International 2010

THIS PAGE INTENTIONALLY LEFT BLANK

© Trynex International 2010

THIS PAGE INTENTIONALLY LEFT BLANK

Auger Drive Assembly Parts Breakdown

Model # SP-8550

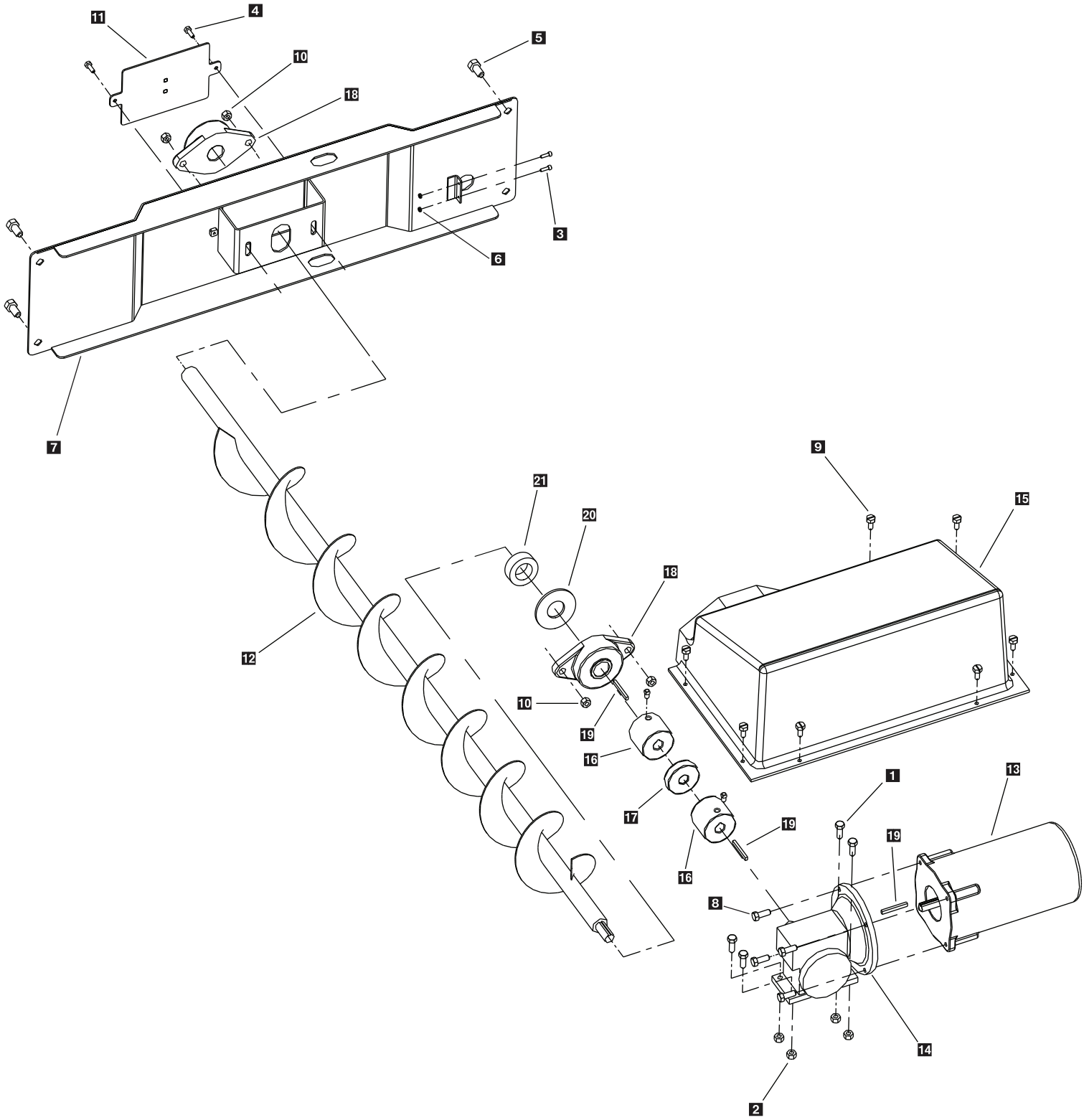

Rev. 01

© Trynex International 2010

Auger Drive Assembly Parts Breakdown

Model # SP-8550

Key	Part No.	Description	Qty.
1	D 4122	3/8"-16 x 1- 1/2" Hex Bolt	4
2	D 6584	3/8" Serrated Flange Nut	4
3	D 6159	10-32 x 2" HH Machine Screw	2
4	D 6132	1/4"-20 x 3/4" Hex	2
5	D 6528	1/2"-13 Serrated Hex Head	4
6	D 6158	10-32 Lock Nut	2
7	D 6803	Rear Rail Assembly	1
8	D 4121	3/8"-16 x 1" HH TCS	4
9	D 6877	#8 x 3/4 Self Drilling HWH	7
10	D 5535	1/2-13 Serrated Flange Nut	4
11	D 6814	Bearing Cover	1
12	D 6816	Variable Pitch Auger	1
13	D 6825	12 Volt High Output Motor	1
14	D 5341	31:1 Auger Transmission	1
15	D 6868	Auger Motor Cover	1
16	D 6842	Trans/Auger Drive Coupler With Locking Hex Bolt	2
17	D 6843	Urethane Spyder	1
18	D 6845	Auger Bearing	2
19	D 6873	3/16" Key Stock	3
20	D 6789	Auger Shaft Hopper Washer	1
21	D 6792	Auger Shaft Hopper Collar	1

© Trynex International 2010

Spinner Drive Assembly Parts Breakdown

Model # SP-8550

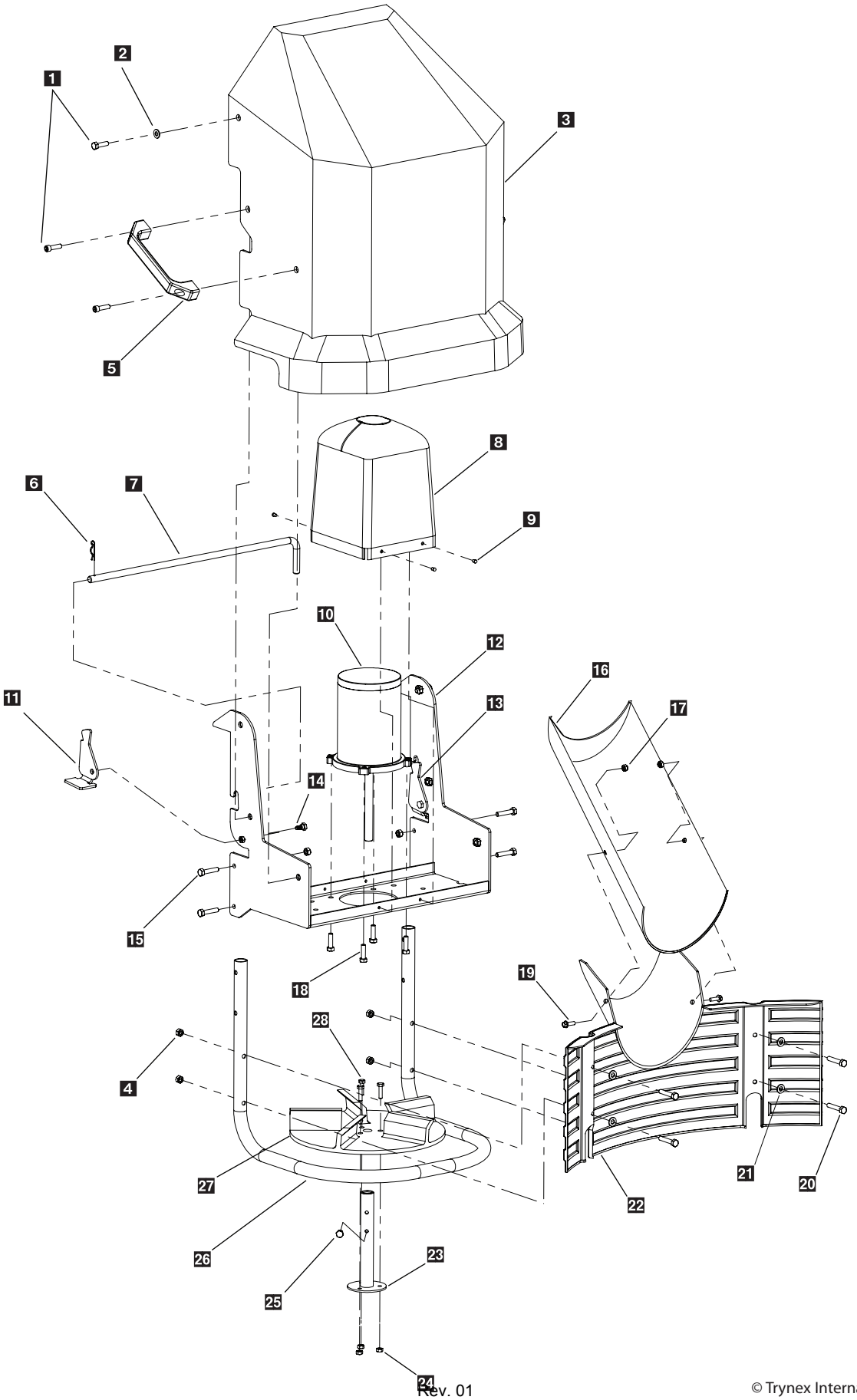

Rev. 01

© Trynex International 2010

Spinner Drive Assembly Parts Breakdown

Model # SP-8550

Key	Part No.	Description	Qty.
1	D 5293	5/16-18 x 1-1/8 Socket Head Cap Screw	6
2	D 5249	5/16 Flat Washer	2
3	D 5349	Spinner Shroud	1
4	D 6138	5/16-18 Nylox Zinc	4
5	D 5248	Plastic Handle	2
6	D 4135	Hair Pin Clip	1
7	D 6563	Drive Pin	1
8	D 5346	Spinner Motor Cover	1
9	D 6333	Long Rivet	4
10	D 6887	Drive Motor	1
11	D 5343	Left Hand Latch	1
12	D 5344	8550 Spinner Drive Enclosure	1
13	D 5342	Right Hand Latch	1
14	T15038	Shoulder Bolt	2
15	D 6462	5/16-18 x 1-3/4 Hex Head Bolt	8
16	D 6833	Plastic Deflector	1
17	T 15016	1/4-20 Nylox Stainless	6
18	D 6452	3/8-16 x 1Serrated Flange Bolt	4
19	D 6132	1/4-20 x 3/4 Serrated Flange Stainless	4
20	D 6462	5/16-18 x 1-1/8	4
21	D 6165	5/16 Flat Washer	4
22	D 6833	Plastic Deflector	1
23	D 6824	Spinner Hub Weldment	1
24	D 4289	1/4" Nylox Nut Zinc	3
25	D 6133	5/16-18 x 1/2 Hex Head	1
26	D 5347	Tubular Spinner Guard	1
27	D 6823	Urethane Spinner	1
28	D 6854	1/4-20 x 1 Serrated Flange	3

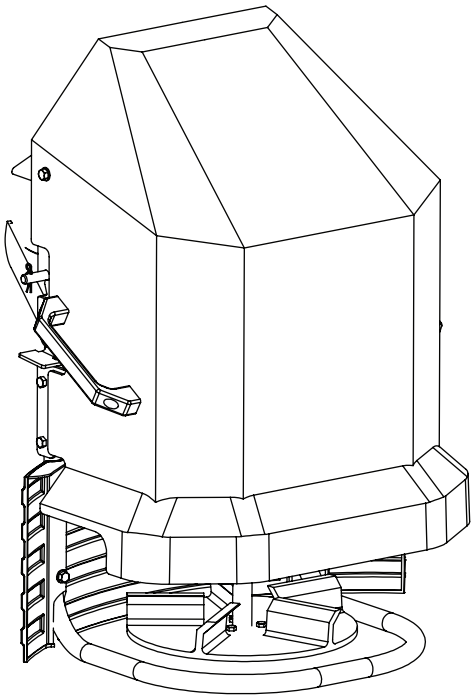

© Trynex International 2010

Hopper Assembly Parts Breakdown

Model # SP-8550

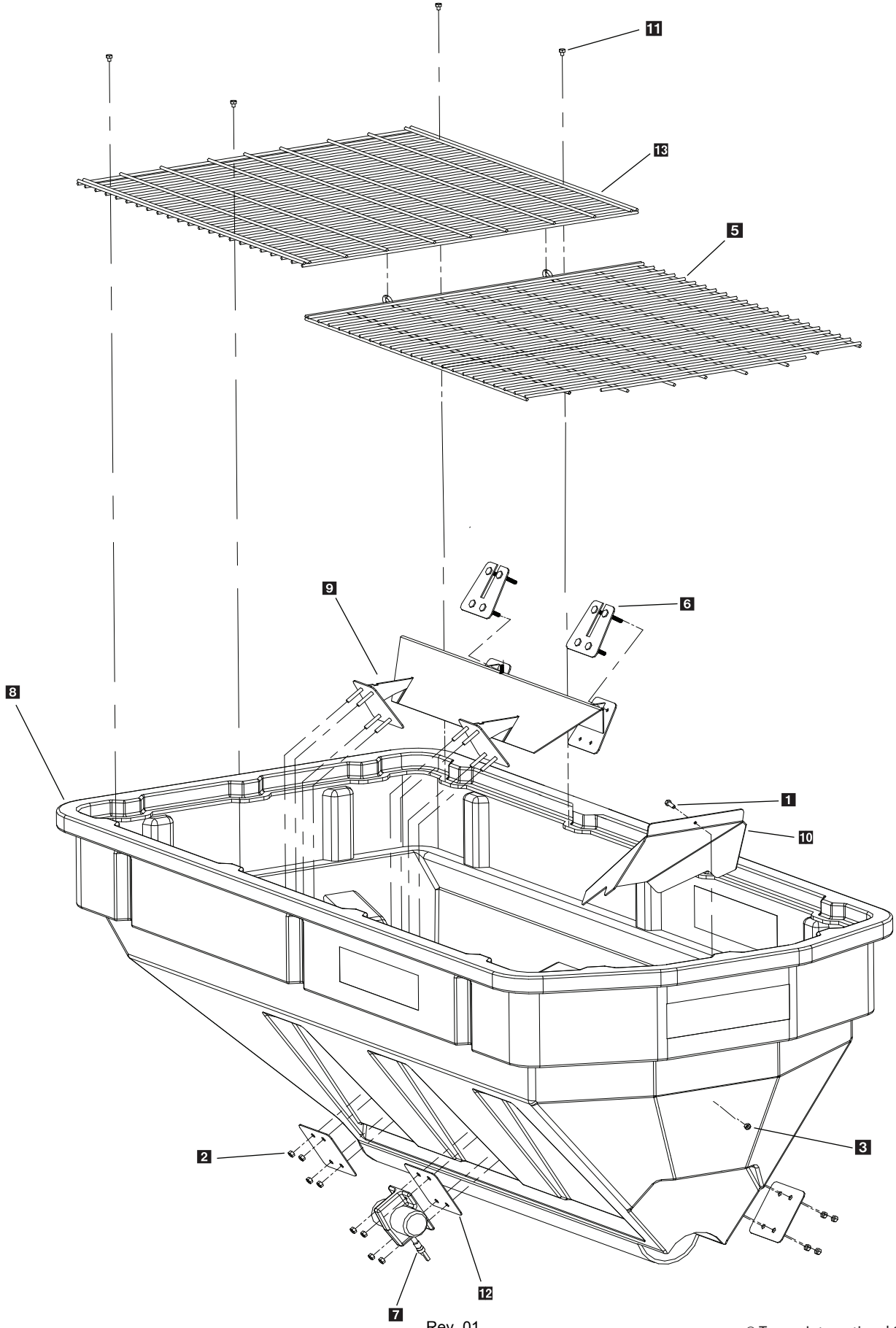

Rev. 01

© Trynex International 2010

Hopper Assembly Parts Breakdown

Model # SP-8550

Key	Part No.	Description	Qty.
1	D 6576	5/16-18 x 1-1/4 HHCS	1
2	D 6584	3/8 Serrated Flange Nut	17
3	D 6165	5/16" Flat Washer	1
4	D 6138	5/16" Nylock Nut	1
5	D 6849	Rear Top Screen	1
6	D 6815	Bolt Plate	2
7	D 6515	Heavy Duty Vibrator	1
8	D 6800	V-Maxx Hopper	1
9	D 6808	Inverted V Assembly	1
10	D 6807	Discharge Baffle	1
11	D 6874	#14 x 1.5" HWH Self Driller	4
12	D 6811	Inverted V Backing Plates	4
13	D 6848	Front Top Screen	1

© Trynex International 2010

Frame Assembly Parts Breakdown

Model # SP-8550

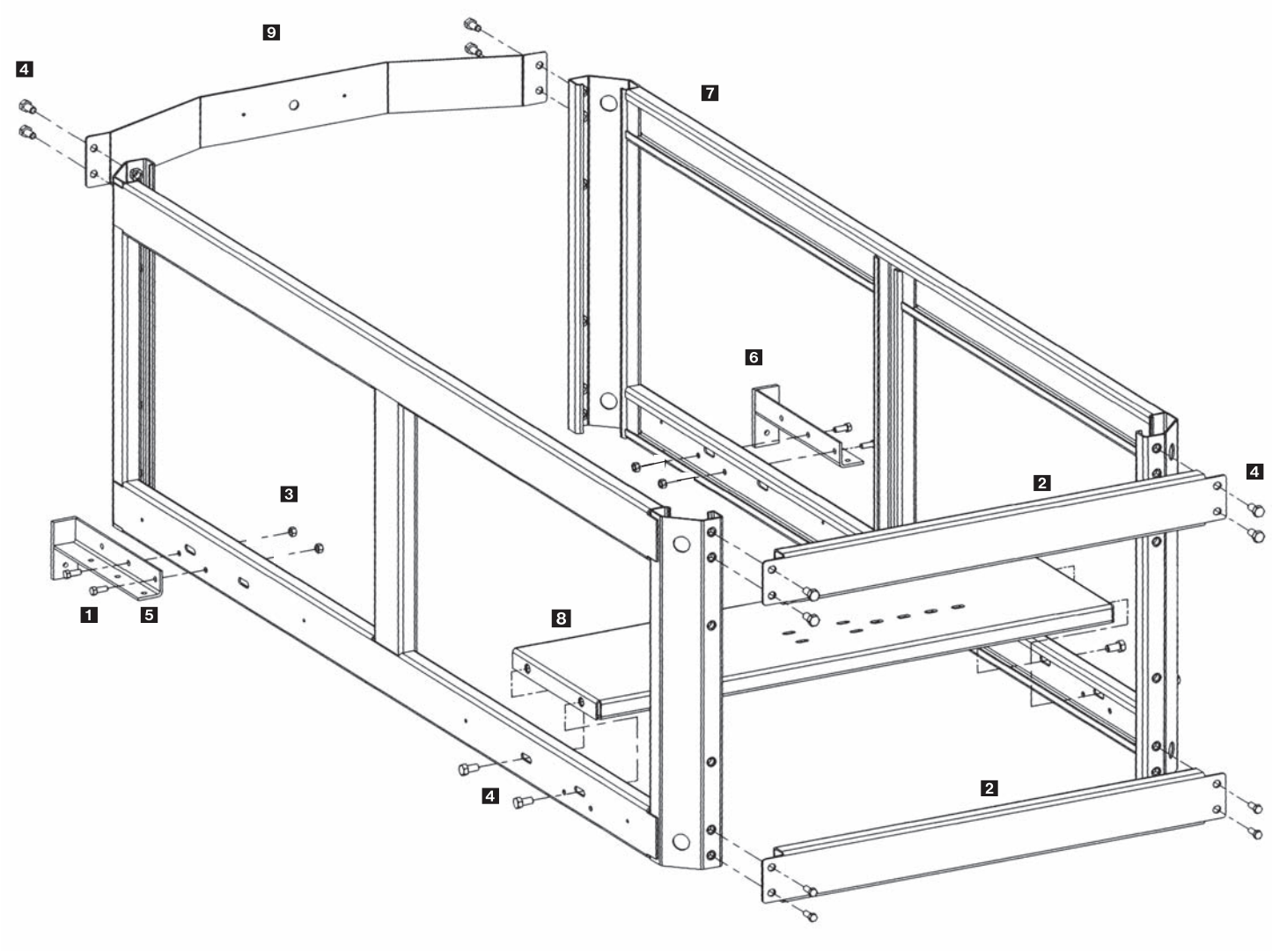

© Trynex International 2010

Frame Assembly Parts Breakdown

Model # SP-8550

Key	Part No.	Description	Qty.
1	D 4121	3/8" - 16 x 1" Hex Bolt	4
2	D 6804	Upper/Lower Front Rail	2
3	D 4124	3/8" Nylock Nut	4
4	D 6528	1/2-13 x 1" Serrated Hex Bolt	16
5	D 6536	Right Stop Bracket	1
6	D 6537	Left Stop Bracket	1
7	D 6801	Side Frame Weldment	2
8	D 5350	Auger Motor Trans Support	1
9	D 6805	Rear Apron	1

© Trynex International 2010

Vehicle Harness Wiring Instructions

Model # SP-8550

Step 1: Take harness assembly and route from the rear of the vehicle to the front. Route harness along frame and attach to frame hole and frame supports. It is not recommended to attach to fuel or brake lines for obvious reasons. Do not route close to exhaust system or engine, even though Snowex uses high temperature wiring. It still could melt under extreme heat and short the spreader electrical system, as well as the vehicle electrical system.

Step 2: Mount rear plug on bumper using supplied bolts, locate towards the center of the bumper to reduce the amount of debris the tires will throw to the rear. Important: Apply a small amount of dielectric grease to the plug. Also try to mount so plug faces upward to help keep plugs tightly sealed.

Step 3: Secure harness from the rear to the front using heavy duty ty-wraps or frame clips along the frame and lighter duty ty-wraps everywhere else.

Step 4: Layout harness portion that connects to the battery along the fire wall and fender well. Do not connect power leads to battery yet. Drill a 3/4" hole in the fire wall, or use existing access hole, for the control portion of the harness and route connector and harness through hole. Be sure to check the area on the other side of the fire wall to make sure you are not drilling into the vehicle harness or a control module. Generally you can drill on either side of the steering wheel for a good location.

Step 4A: The power harness from control box to battery will need to be routed from the inside of the cab to the battery – this results from the large high amperage connector. Route leads with lugs to battery — do not connect power at this time.

Step 5: Connect harness to the back of the controller and mount to a suitable location. NOTE: You may want to contact customer before mounting controller as some prefer not to have holes drilled into the dashboard. Ty-wrap loose controller harness and move to the engine compartment. Do not mount close to any heater vents.

Step 6: Connect power leads to the battery: Red + Positive, Black – Negative, always connect to the primary battery if using a dual battery system. Secure loose loom to any other large or medium vehicle harness with medium duty ty-wraps this will secure wiring harness.

Step 7: Push the ON/OFF button on the controller to check for power; when that has been confirmed turn power **OFF**. The electrical portion of the installation is complete.

© Trynex International 2010

Control and Harness Diagram

Model # SP-8550

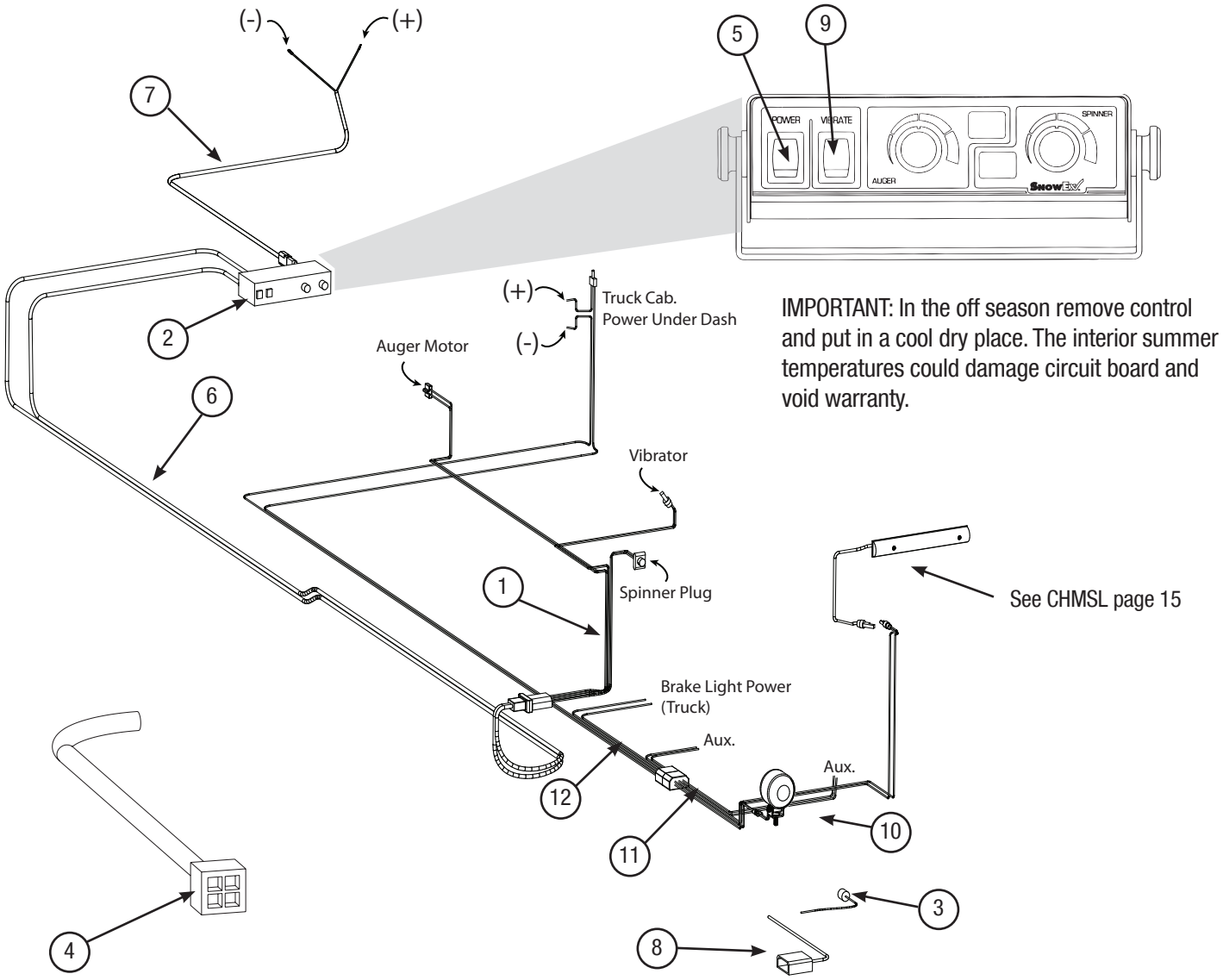

IMPORTANT: In the off season remove control and put in a cool dry place. The interior summer temperatures could damage circuit board and void warranty.

IMPORTANT: Do Not modify harness length. Any modifications will void warranty.

Special Notes:

1) All external connections must have dielectric grease.

2) Read lead labels before attaching to power source or ground.

3) No other devices may be spliced into wiring harness.

4) Any repairs to wiring harness must be done with heat shrink butt connectors.

Key	Part No.	Description	Qty
1	D6838	Spreader Harness	1
2	D5716	Spreader Control	1
3	D6118	Dust Cover I Standard	1
4	D6170	Connector Adapter I 6” Anderson	1
5	D6237	Power Switch I 5 Terminal	1
6	D6836	Vehicle Harness	1
7	D6837	Control Power Cable	1
8	D6343	Dust Cover	2
9	D6354	Vibrator Switch I 3 Terminal Red	1
10	D6784	Utility Work Light	1
11	D6785	Light Kit Spreader Harness	1
12	D6786	Light Kit Vehicle Harness	1

© Trynex International 2011 (REV 001)

Controller Wiring Diagram

Model # SP-8550

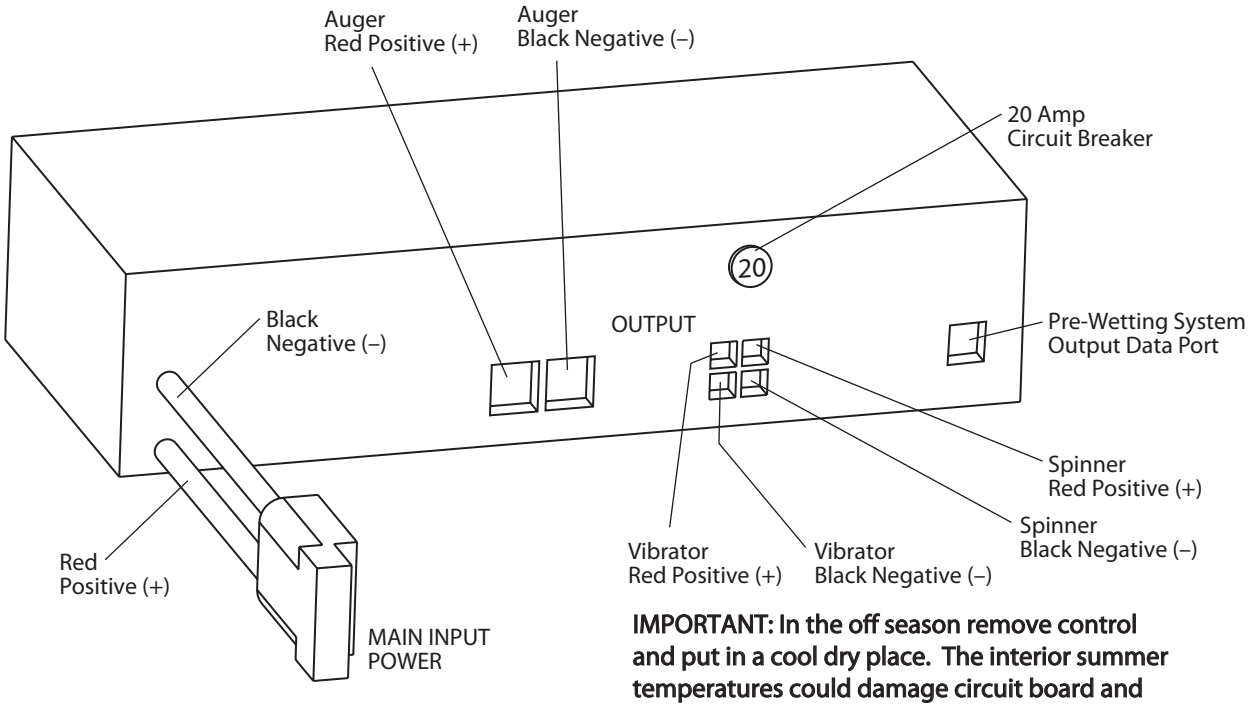

IMPORTANT: In the off season remove control and put in a cool dry place. The interior summer temperatures could damage circuit board and void warranty.

D6837 Control Power Cable with D6840 Breaker

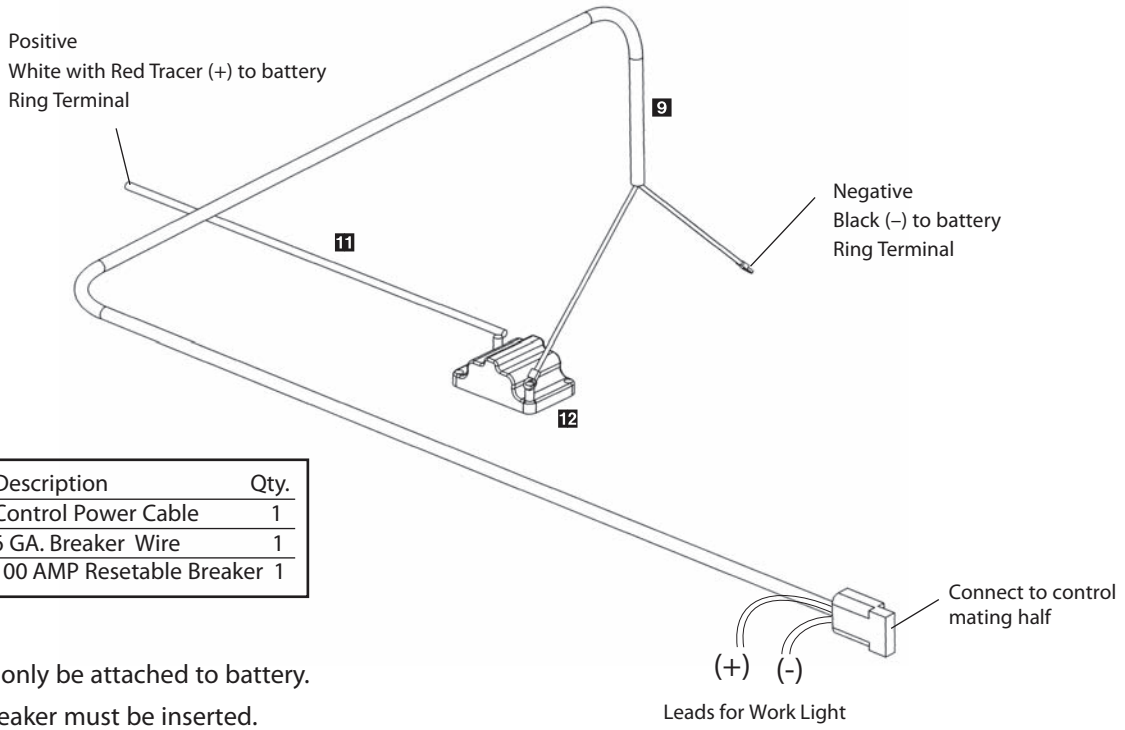

Key	Part No.	Description	Qty.
9	D 6837	Control Power Cable	1
11	D 6839	6 GA. Breaker Wire	1
12	D 6840	100 AMP Resetable Breaker	1

* NOTE:

A) Leads must only be attached to battery.

B) 100 Amp breaker must be inserted.

 © Trynex International 2009

Spreader Power Harness Circuit Diagram

Model # SP-8550

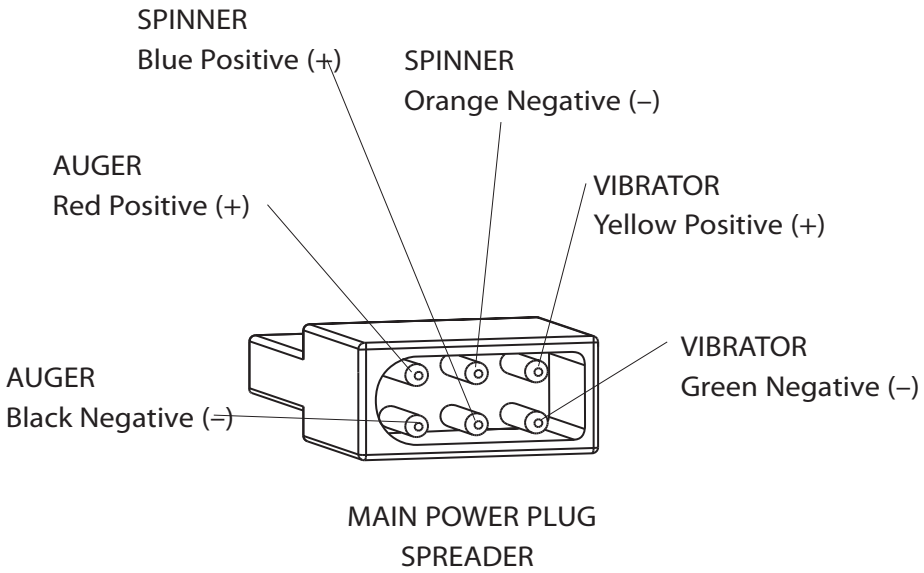

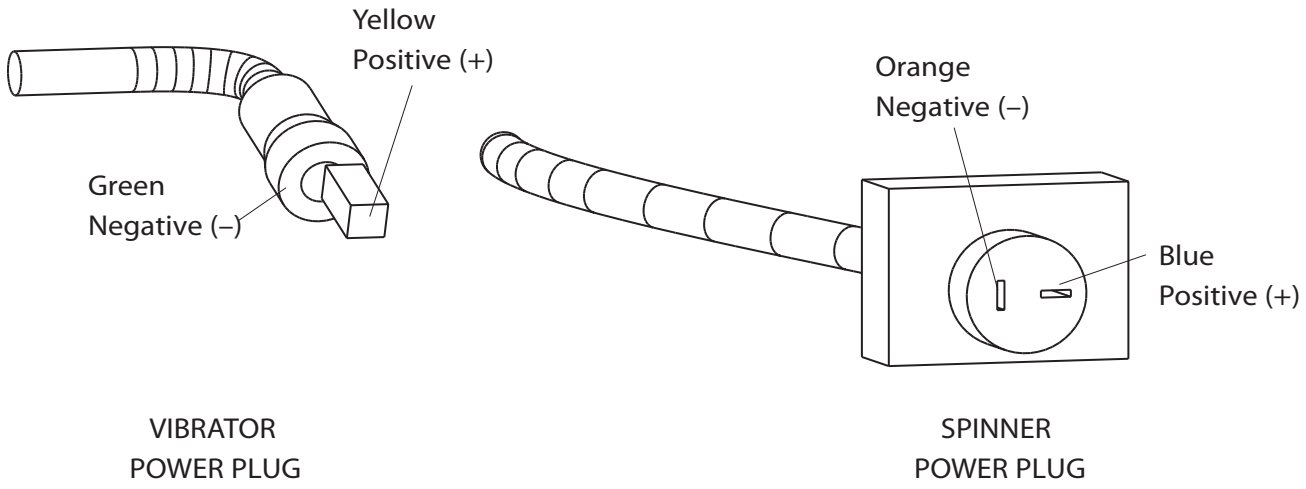

© Trynex International 2010

Vehicle Harness Circuit Diagram

Model # SP-8550

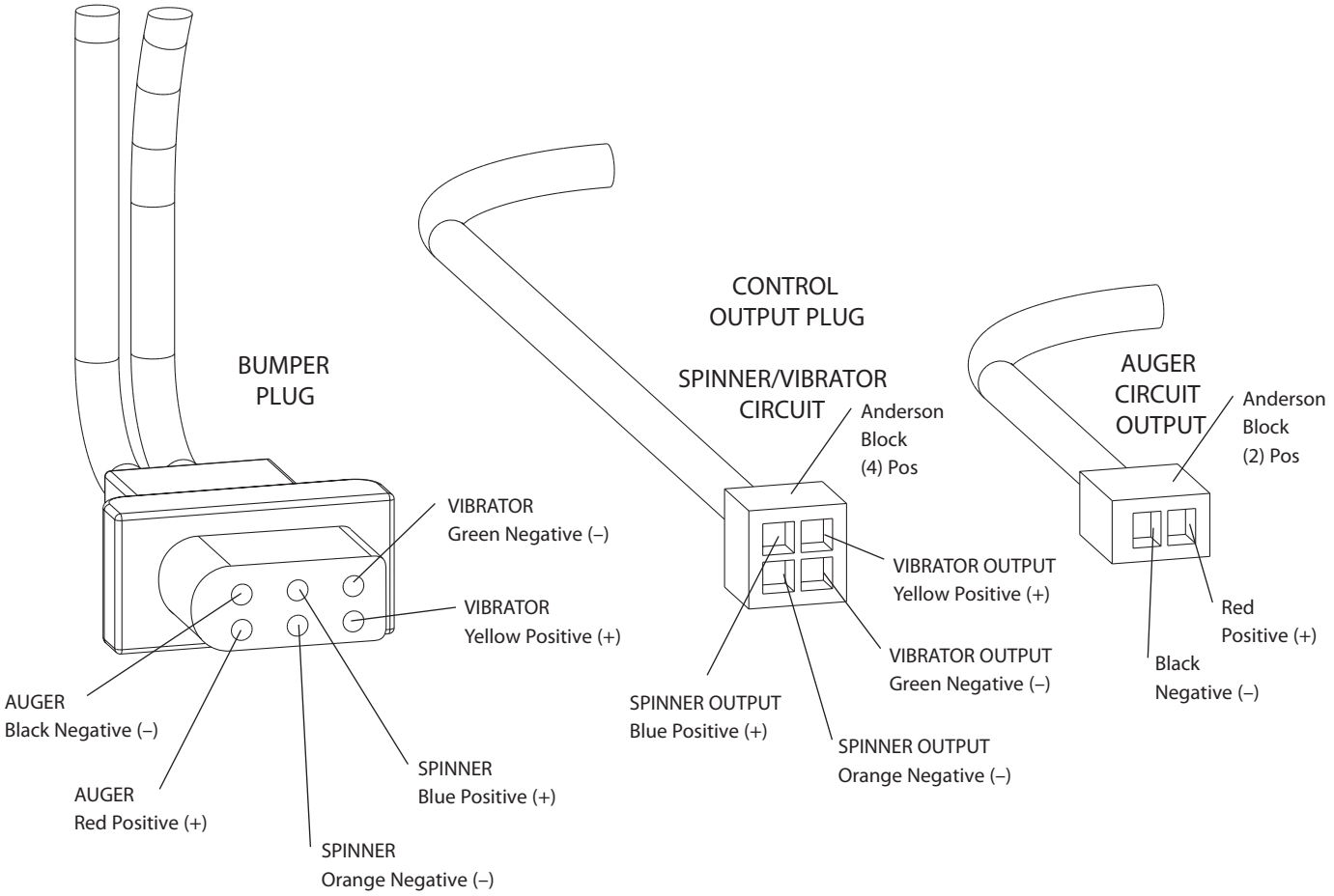

* NOTE: Reference Bumper Plug for Color Code

© Trynex International 2010

Center High Mount Stop Lamp (CHMSL)

Model # SP-8550

- With spreader mounted on vehicle, plug vehicle (CHMSL) harness into spreader stop lamp harness.
- Using supplied harness clamps and screws, route harness along side wall lower corner or so that harness will be out of the way when spreader is in use.
- Locate vehicle ground wire and stop lamp power wire at rear of vehicle. Use supplied wire taps to connect harness to vehicle electrical system. Once wire taps are installed, check to make sure stop lamp works when brake pedal is pressed. Properly complete installation by tying up any loose wires with ty-wraps, also add electrical tape over both connections to insure a solid electrical connection. Some newer trucks have auxiliary stop lamp power leads already at the rear for these types of applications.

CHMSL Spreader Harness

(installed on Spreader from factory)

Key	Part No.	Description	Qty.
1	D 6158	#10 Lock Nut	2
2	D 6514	CHMSL Spreader Harness	1
3	D 6529	#10 Black Oxide Screw	2

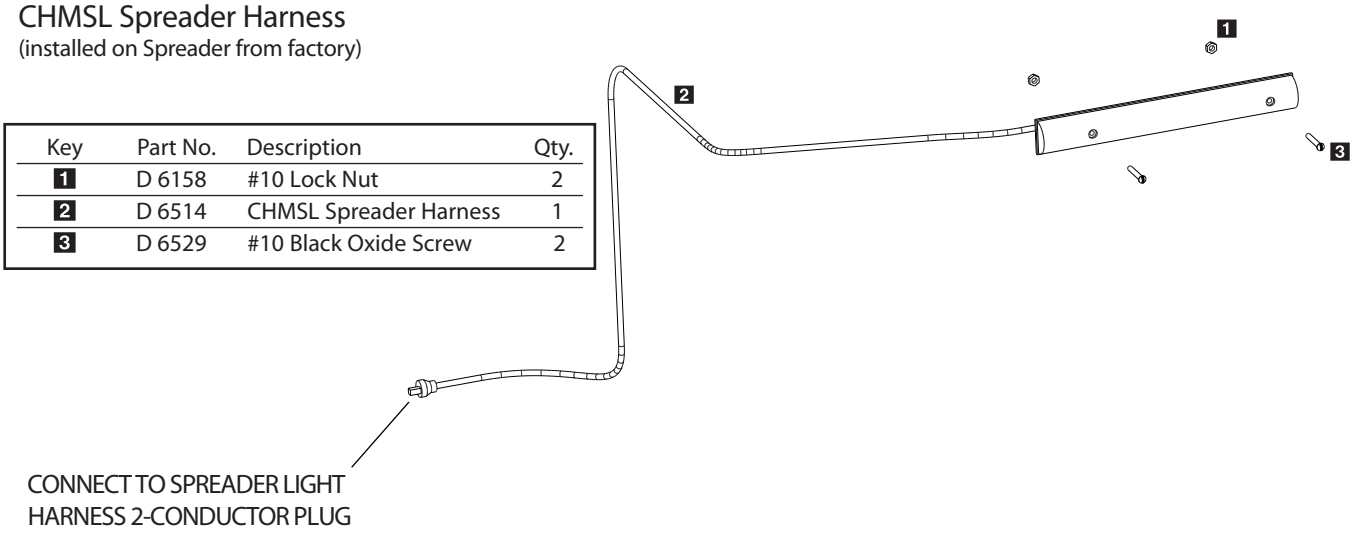

© Trynex International 2010

Mounting System Strapping Techniques

Model # SP-8550

Figure 1

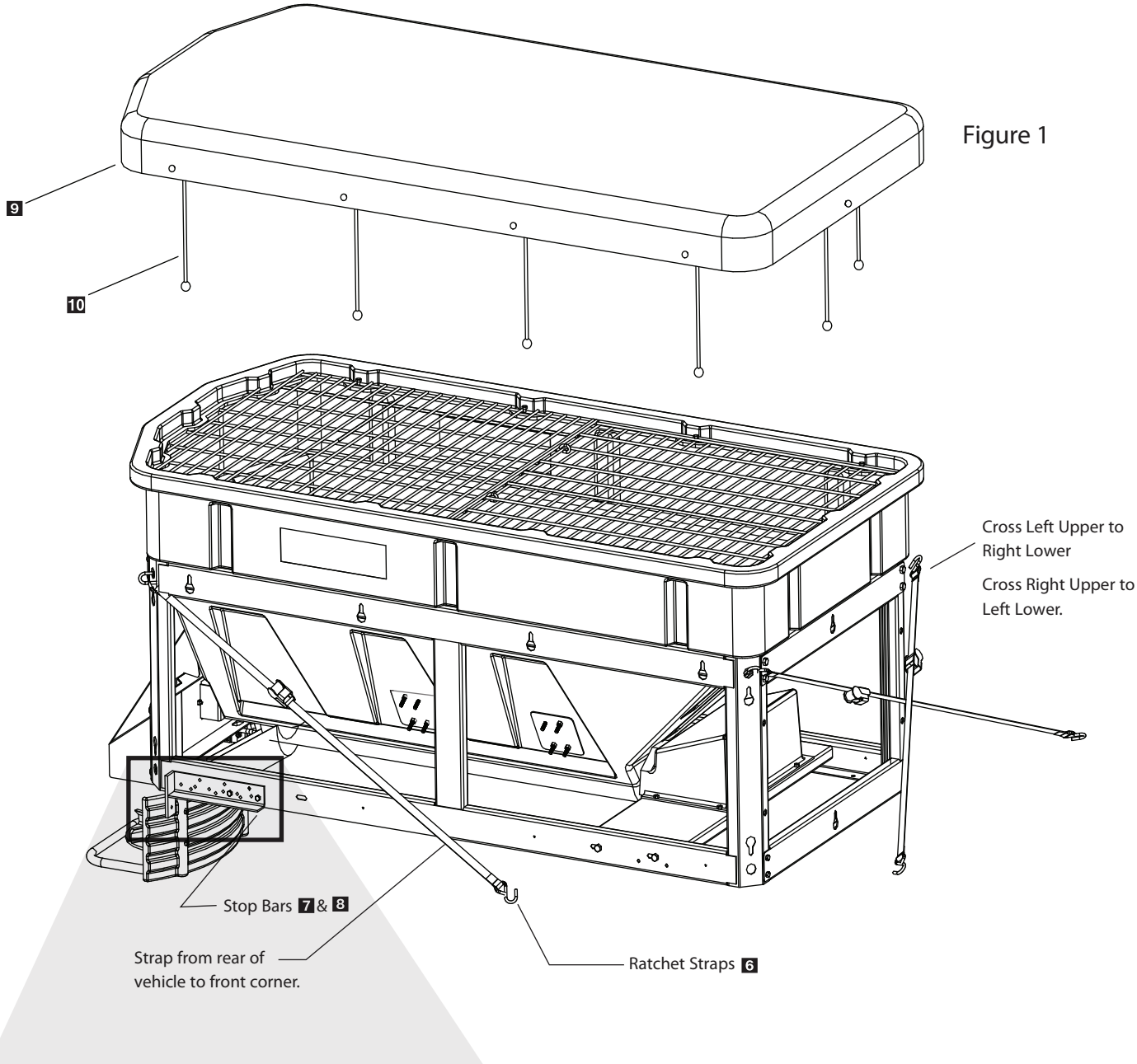

Figure 2: Frame Mounting Bolts

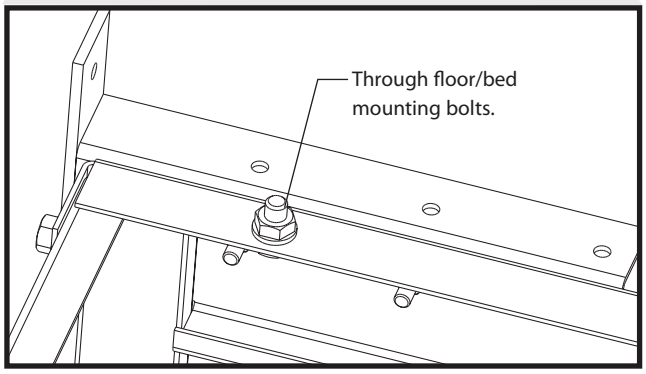

Key	Part No.	Description	Qty.
1	D 4116	1/2" - 13 x 1-1/2" Hex Bolt	4
2	D 4119	1/2" Flat Washer	4
3	D 4120	1/2" Lock Nut	4
4	D 4121	3/8 - 16 x 1" Hex Bolt	4
5	D 4124	3/8" Lock Nut	4
6	D 6856	Ratchet Strap	4
7	D 6536	Adj. Stop Bracket RT	1
8	D 6537	Adj. Stop Bracket LT	1
9	D 6855	Tarp	1
10	D 6522	Bungie Straps (13 Per Pkg)	1

Rev. 01

© Trynex International 2009 L1159

Mounting Instructions

Model # SP-8550

NOTE: Pay special attention when drilling or clamping dissimilar metals to aluminum bodies. Galvanic corrosion can occur if not handled properly. Contact vehicle manufacturer for recommended practices.

Step 1: Remove tailgate from pickup bed.

Step 2: Load spreader on to truck bed and mount spinner assembly.

Step 3: Slide spreader forward until deflector/chute assembly makes contact with vehicle. Then, slide spreader back approx. 1" to allow for proper clearance.

Step 4: Install stop bars using supplied hole patterns (see Fig.2). To achieve the best position, you may need to drill additional holes in bracket in order to properly position spreader.

Step 5: Now that the spreader is positioned front to back, you will now center it left to right. Looking at the inside front and rear corner of the lower frame area, you will notice (4) holes in the bottom of the frame. Using a paint pen or similar marking device, mark hole locations.

Step 6: Before drilling holes, look beneath the approximate area where each hole will be located. Make sure there are no vehicle components that will be in the path of the drill before doing this step. If there are interferences, you can relocate holes as needed making sure there are at least two forward and two rearward of the front to back centerline.

Step 7: Install and tighten all (4) bolts.

Step 8: Install ratchet straps (see V-Maxx 8500 Mounting System: Strapping Techniques). It is very important for everyone's safety this strapping method be used as the standard mounting procedure. (Do not use ratchet straps exclusively.)

Step 9: Connect the spreader power cord to vehicle main power plug mounted at rear of vehicle (see electrical installation).

Step 10: Connect Center High Mount Stop Lamp (CHMSL) cord from the spreader to mating half attached to vehicle (See electrical installation).

© Trynex International 2010

THIS PAGE INTENTIONALLY LEFT BLANK

© Trynex International 2010

BAFFLE INSTRUCTIONS

- The V-Maxx 8550 uses a dual baffle design over the auger area. This baffle (D6809) is used for dry bulk materials. The baffle is designed to reduce the risk of leakage with clean/dry free-flowing materials. If the material you are using is damp/wet, you may need to remove baffle (D6809). This will allow for more unrestricted flow of materials and possible bridging.
- WARNING: Always disconnect power source before attempting to remove material baffle.
- The main baffle assembly (D 6808) **MUST** never be removed from **its original factory installed position unless the unit is being** serviced or the Optimum Flow Kit is being installed.

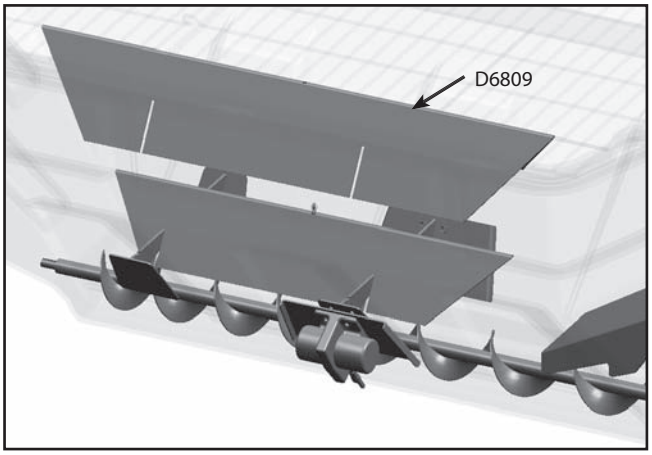

BAFFLE EXTENSION INSTRUCTIONS

- The Baffle Extension is installed at the time of assembly. The main purpose of this baffle is to keep dry, free-flowing material from leaking out.
- If you plan on using damp/wet materials, you should remove this baffle by removing the self-drilling screws.
- If you are using a sand/salt mixture, remove baffle extension.

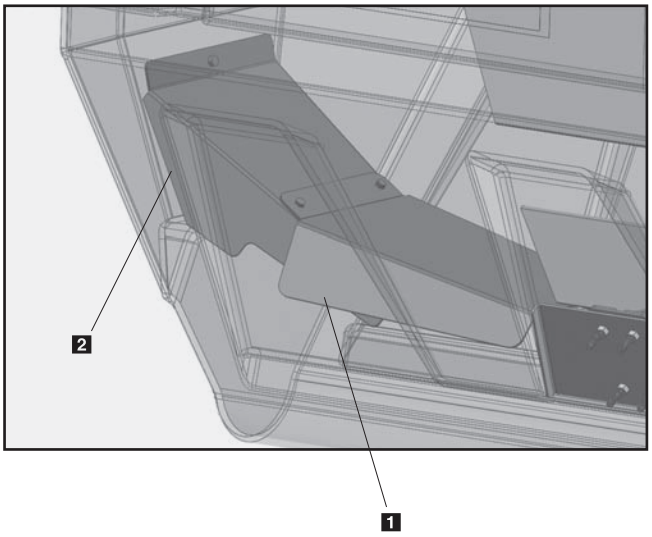

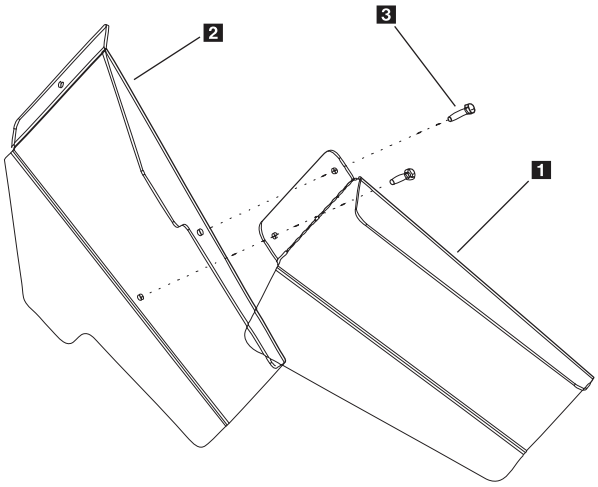

Key	Part No.	Description	Qty.
1	D 6847	Salt Baffle Extension	1
2	D 6807	Discharge Baffle	1
3	D 6874	#14 x 1-1/2" TEK w/Neo Washer	2

© Trynex International 2010

PREPARATION

CAUTION – Sweep area clear of foreign objects or obstacles that could cause personal injury. Keep other persons, children, or animals out of the area to be spread.

SPREADER LOADING

WARNING – Do not overload vehicle. Use chart below to calculate weight of material. Weights of material are an average for dry materials.

Material	Weight Per Cubic Ft.
Rock Salt	45-80 lbs.
Sand/Salt Mix	95-120 lbs.

- Be sure to comply with manufacturer's maximum gross vehicle weight ratings.
- Warning– Never leave material in hopper for long periods of time as salt is hygroscopic and will attract atmospheric moisture and harden up. When spreading sand mix, a 1:1 ratio for Sand/Salt mix is recommended to prevent the material from freezing.

SPREADING TIPS

- Never exceed 10 m.p.h. when spreading.
- For a wider pass, increase spinner speed.
- For a heavier pass, drive slower, or increase auger speed.
- Never operate spreader near pedestrians.
- Spread ice melters with the storm to prevent unmanageable levels of ice.
- Calculate spread pattern when near vegetation.

8500 CONTROL OPERATION

- The Dual Variable Speed Control has dual finger-tip dials for maximum performance, digital system status with warning protection and built-in Vibrator Switch.
- To start, press power switch on controller and spreader will accelerate to speed set on spinner and auger dials.
- To stop, press power switch on controller to off position.
- Speed of auger and spinner may be adjusted separately to get desired flow and spread distance from spreader.
- The Vibrator Switch is needed for dense material or to increase the flow to the auger. This eliminates bridging of material in hopper.
- In case spreader becomes jammed, it will go into an auto-reverse program to free itself. Auger display will show (AR) while trying to clear obstruction.

© Trynex International 2010

WARNING PROTECTION

- If audible beeping occurs, read display to identify problem. If display reads “OL” (overload) or “OH” (overheat) shut controller down and carefully clear jammed auger. If display reads “E1“ this means there is a dead short in system. Do not use until problem is corrected. If display reads “E 0” this means that the motor is not getting any power. Check all connections. If display reads “LB” the vehicle battery is extremely low (possibly caused by a poor or corroded connection) and could damage the system. Also check all other connections as well as this can be a sign of a poor connection elsewhere in the system.

- If there are any problems while operating the spreader, refer to Troubleshooting Guide.

AUTO-REVERSE “AR” FUNCTION

- If your controller displays “OL” this could indicate a jammed auger.
- To engage the Auto-Reverse “AR” function:

Step 1: Shut the Main Power Switch OFF for 3 seconds.

Step 2: Turn the Main Power Switch ON. When the machine starts back up the “AR” sequence will automatically start and the auger will reverse for several rotations to clear the jam.

- After a pause of several moments, the auger will automatically return to correct rotation.
- If the jam is still not cleared, the controller will again display “OL”.
- You may repeat Steps 1 & 2 for a second and third time.
- If after the third try the controller displays “OL” — you must extract the material that is causing the problem.
- Follow all warning directions when clearing jams.

© Trynex International 2010

Troubleshooting

Model # SP-8550

Whenever service is necessary, your local SnowEx Dealer knows your Spreader best. Take your Spreader to your local dealer for any maintenance or service needs on your unit. If this is not possible, the Troubleshooting Guide below may assist you in identifying the problem.

Warning: First read all warning instructions and safety messages before servicing your spreader.

Preliminary Checks
- Be sure all electrical connections are tight and clean.
- Be sure nothing is jammed in the hopper.

PROBLEM	POSSIBLE CAUSE	SOLUTION
Motor doesn't run.	Loose electrical connections.	Check all connections.
	Blown Fuse.	Replace fuse.
	Motor Seized.	Replace motor.
Controller shut down.	Jammed auger.	Carefully clear jammed material.
	Poor electrical connections.	Clean or replace connectors. Use dielectric grease.
	Electrical short.	Check electrical connections. Check for bare wires.
	Controller failure.	Replace controller.
Material not flowing from hopper.	Empty hopper.	Fill hopper.
	Wet material.	Replace with dry material.
	Frozen or coarse material.	Replace material.
	Spinner not turning.	Check drive assembly.
	Auger loose on shaft.	Tighten locking bolt on the side of the auger. There is a flat machined on the driver shaft. Align the auger with this flat and tighten the bolt.
	Vibrator not working.	Replace vibrator
Audible alarm beeping and display shows OL or OH.	Jammed auger, overload shut down.	Turn off for three seconds, then restart. If shut down continues, turn off controller. Clear debris and lumps from auger areas.
Audible alarm beeping display shows E1.	Short in system.	Turn off. Do not use until problem is corrected.
Audible alarm beeping display shows EO.	Motor is not getting power.	Turn off. Check all connections.
Audible alarm beeping display shows LB.	Vehicle battery is extremely low, or a poor connection exists.	Turn off. Charge battery.

© Trynex International 2010

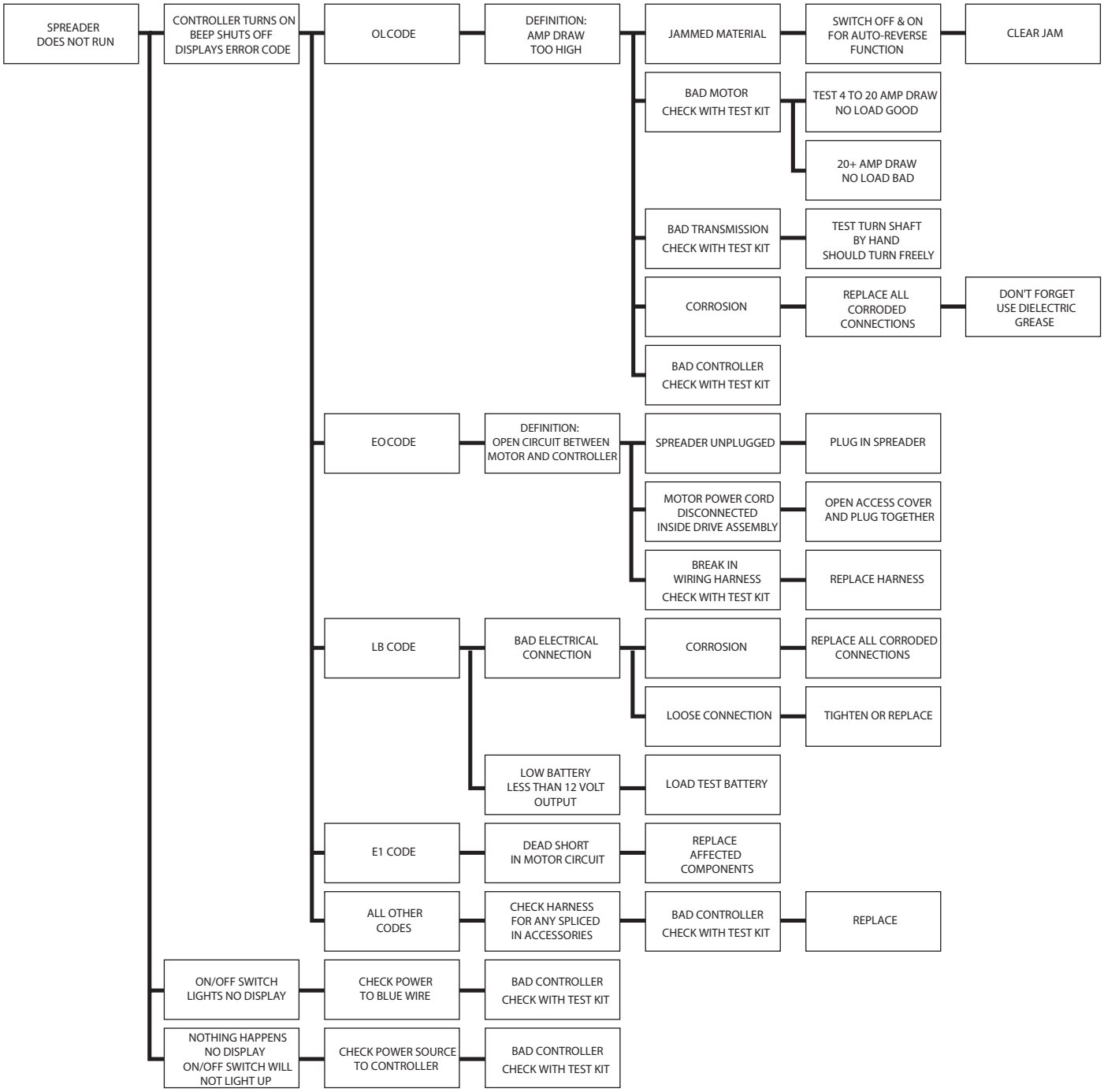

© Trynex International 2010

Troubleshooting Material Flow

Model # SP-8550

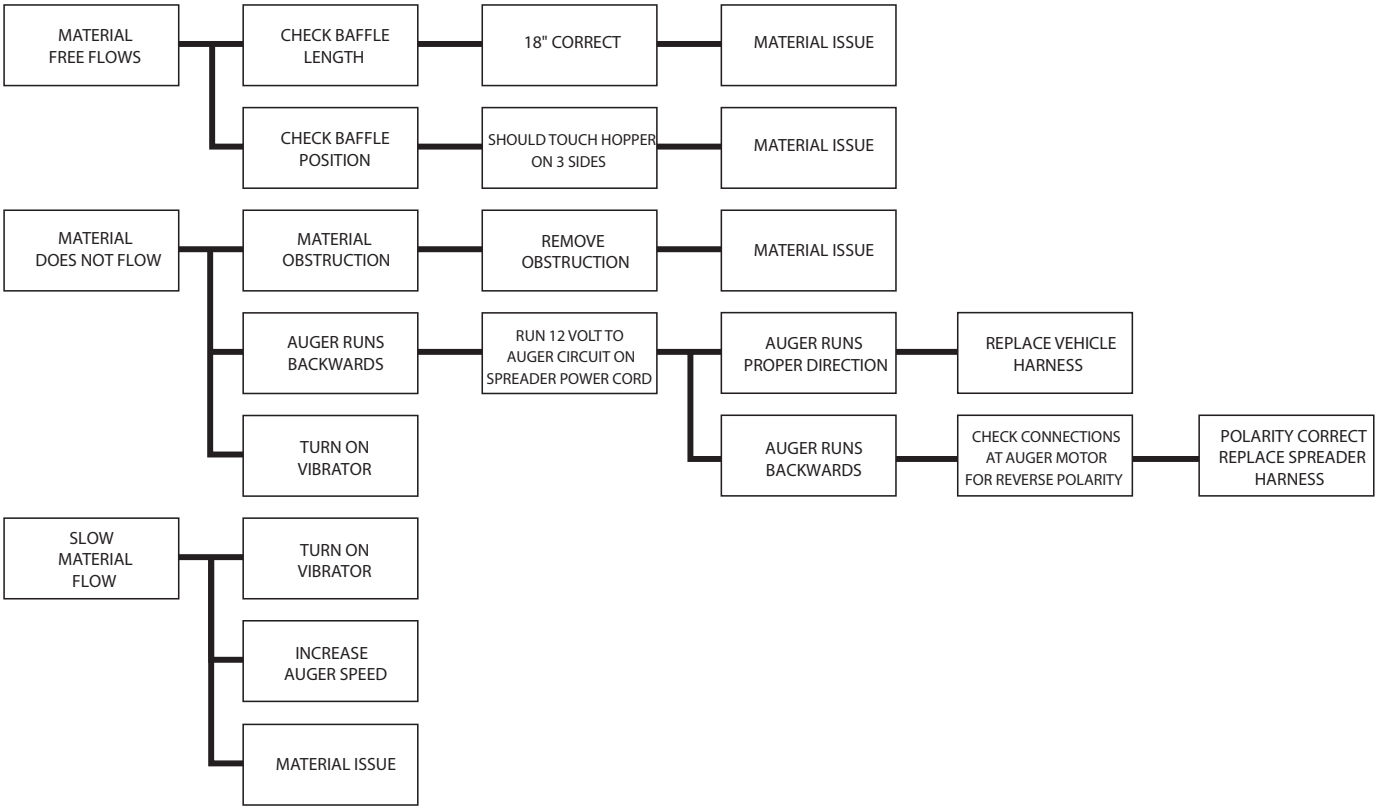

© Trynex International 2010

Spreader Maintenance

Model # SP-8550

- WARNING – When servicing is necessary, perform it in a protected area. Do not use power tools in rain or snow because of danger of electrical shock or injury. Keep area well lighted. Use proper tools. Keep the area of service clean to help avoid accidents.
- WARNING – Disconnect electricity to spreader before servicing.
- CAUTION – The controller is a solid state electronic unit and is not serviceable. Any attempt to service will void warranty.
- CAUTION – There are no serviceable parts in the motor/transmission assembly. Any attempt to service will void warranty.
- CAUTION – When replacing parts use only original manufacturer's parts. Failure to do so will void warranty.
- Use dielectric grease on all electrical connections to prevent corrosion at the beginning and end of the season and each time plugs are disconnected.
- Gently wash unit after each use to prevent material build-up and corrosion.
- CAUTION – When pressure washing motor enclosure area, stay at least 36" away from all electrical items.
- Paint or oil all bare metal surfaces at the end of the season.
- Apply small amount of light oil to latches as needed.
- If motor cover is removed for any reason, use silicone sealant to ensure weather proofing of enclosure.
- Grease bearings after every 20 hour's use.
- After first use, tighten all nuts and bolts on spreader and mount.
- WARNING: Never remove spreader with material in hopper.
- ATTENTION: Store control in cool dry place during the off season.
- CAUTION – Spinner motor is not designed for continuous duty. Allow motor to cool between long cycle times.
- CAUTION – Vibrator is not designed for continuous duty. Allow motor to cool between long cycle times.
- CAUTION – Do not modify vehicle or spreader wiring harness. Doing so will void product warranty.

© Trynex International 2010

Determining Vehicle Payload

Material Type	Example: Coarse Salt – Dry				
Equipment installed when vehicle was weighed	SP-8550				
Front Gross Axle Weight Rating (RGAWR)					
Rear Vehicle Weight Rating (GVWR) (lb.)	8600				
Gross Vehicle Weight (GVW) (lb.) (empty)	– 6500	–	–	–	–
Payload Available (lb.)	= 2100	=	=	=	=
Material Weight (lb./cu. yd.)	÷ 1431	÷	÷	÷	÷
Maximum Volume (cu. yd.)	= 1.47	=	=	=	=
Maximum Height (approximate) (in.)	24"				
Loaded Front Gross Axle Weight (FGAW) (lb.)					
Loaded Rear Gross Axle Weight (RGAW) (lb.)					
Loaded Gross Vehicle Weight (GVW) (lb.)					

Torque Chart

When tightening fasteners, refer to the Torque Chart below for the recommended fastener torque values.

Recommended Fastener Torque Chart (ft.-lb.)

SIZE	SAE Grade 2	SAE Grade 5	SAE Grade 8
1/4-20	6	9	13
5/16-18	11	18	28
3/8-16	19	31	46
3/8-24	24	46	68
7/16-14	30	50	75
1/2-13	45	75	115
9/16-12	66	110	165
5/8-11	93	150	225
3/4-10	150	250	370
7/8-9	202	378	591
1-8	300	583	893

Metric Grade 8.8 (ft.-lb.)

SIZE	TORQUE	SIZE	TORQUE
M 6	7	M 12	60
M 8	17	M 14	95
M 10	35	M 16	155

These torque values apply to mount assembly fasteners except those noted in the instruction.

Material Weights

Refer to the table below for the weight per cubic yard of common spreading materials.

MATERIAL	WEIGHT (lb. per cubic yard)
Fine Salt – Dry	2,025
Coarse Salt – Dry	1,431
Sand/Salt Mix – Dry (50/50)	2,700
Cinders	1,080

© Trynex International 2010

Limited Warranty

SnowEx products are warranted for a period of two years from the date of purchase against defects in material or workmanship under normal use and service, subject to limitations detailed below. Warranty period of two years begins on the date of purchase by the original retail user.

The WARRANTY REGISTRATION CARD must be returned to the manufacturer for this warranty to become effective. This warranty applies to the original retail purchaser only. This warranty does not cover damages caused by improper installation, misuse, lack of proper maintenance, alterations or repairs made by anyone other than authorized Trynex dealers or Trynex personnel. Due to the corrosive properties of the materials dispensed by spreaders, Trynex does not warrant against damage caused by corrosion. Warranty claims by the user must be made to the dealer from where the product was purchased, unless otherwise authorized by Trynex. Trynex reserves the right to determine if any part is defective and to repair or replace such parts as it elects. This warranty does not cover shipping costs of defective parts to or from the dealer.

LIMITATION OF LIABILITY

Neither Trynex, nor any company affiliated with it, makes any warranties, representations for promise as to the performance or quality other than what is herein contained. The liability of Trynex to the purchaser for damages arising out of the manufacture, sale, delivery, use or resale of this spreader shall be limited to and shall not exceed the costs of repair or replacement of defective parts. Trynex shall not be liable for loss of use, inconvenience or any other incidental, indirect or consequential damages, so the above limitations on incidental or consequential damages may not apply to you.

NO DEALER HAS AUTHORITY TO MAKE ANY REPRESENTATION OR PROMISE ON BEHALF OF TRYNEX INTERNATIONAL, OR TO ALTER OR MODIFY THE TERMS OR LIMITATIONS OF THIS WARRANTY IN ANY WAY.

© Trynex International 2010

Warranty Registration and Customer Survey

To initiate the warranty on your new SnowEx spreader and assure prompt warranty service, please complete the following warranty registration and customer survey, sign and mail it back to the factory within 30 days of purchase.

1) Date of Purchase: _____

2) Name: _____

Address: _____

_____

Phone: _____

3) SnowEx Model Purchased: _____ Serial Number: _____

4) Is this your first Trynex Spreader? ❑ Yes ❑ No

5) What type of vehicle are you using with your Spreader?

Make _____ Model _____ Year _____

6) What type of material are you using in your spreader? _____

7) SnowEx Dealer Name: _____

SnowEx Dealer Address: _____

_____

SnowEx Dealer Phone: _____

8) Does your Trynex Dealer stock Trynex replacement Parts? ❑ Yes ❑ No ❑ I don't know

9) Do you feel your Trynex Dealer sold you the correct product for your needs/application? ❑ Yes ❑ No

10) How would you rate your overall satisfaction with your SnowEx Dealer?	❑ Very Satisfied	❑ Satisfied	❑ Somewhat Satisfied	❑ Somewhat Dissatisfied	❑ Dissatisfied	❑ Very Dissatisfied
11) How would you rate your overall satisfaction with your SnowEx Product?	❑ Very Satisfied	❑ Satisfied	❑ Somewhat Satisfied	❑ Somewhat Dissatisfied	❑ Dissatisfied	❑ Very Dissatisfied

12) Would you purchase another Trynex Product? ❑ Yes ❑ No

13) If you would like to receive E-Mail ALERTS for new products, bulletins or special promotions please supply address : _____

14) Please use the space below to convey your comments and/or suggestions.

_____

_____

_____

_____

NOTE: I have read the owner's manual and all safety precautions and I understand that this equipment could be dangerous if not operated with care and under the proper conditions.

15) Owner's signature: X _____

PLEASE FOLD AND SEAL WITH TRANSPARENT TAPE BEFORE MAILING.

© Trynex International 2010

Warm Up to SNOWEX® with a FREE Winter Band!

Simply Fill Out Your Warranty Registration and Return It to the Factory!

From:

_____

_____

_____

Postage Required
Post Office will not deliver without proper postage.

TRYNEX® INTERNATIONAL

23455 REGENCY PARK DR.
WARREN MI 48089-2667

Rev. 01