SNOWEX®
SNOWPLOWS

September 1, 2020
Lit. No. 72188, Rev. 01

MECHANIC'S GUIDE

RD, HD & LT STRAIGHT BLADE SNOWPLOWS

SCRAPE MAXX™

Automatixx®
ATTACHMENT SYSTEM

⚠ CAUTION
Read this manual before servicing the snowplow.

TABLE OF CONTENTS

INTRODUCTION 3
Recommended Tools and Available Service Items 3

SAFETY 4
Torque Chart 6

BLADE, A-FRAME & HEADGEAR 7
Installing the Emergency Transport Chain 7
Aiming Headlamp Beams 8

HYDRAULIC SYSTEM 9
SnowEx® Straight Blades Hydraulic System Specifications 9
Hydraulic Unit Components Diagram 11
Valve Locations 12
Cartridge Valves 13
Check Valves 14
Relief Valves 14
Hydraulic Fitting and Hose Installation 15
Blade Drop Speed Adjustment 16

CAB CONTROLS 17
Overview 17
Operating the POWER GRIP™ Hand-Held Control 18
Operating the Joystick Control 19

FLEET FLEX ELECTRICAL SYSTEM 21
Smooth Stop and One-Touch FLOAT Features 21
SECURITY GUARD™ Snowplow Anti-Theft System 22

VEHICLE-SIDE ELECTRICAL COMPONENTS 25
Harness Diagram – 3-Port Isolation Module 25
3-Port Isolation Module Overview 26

Scrape Maxx™ DOWN FORCE ACCESSORY KIT 28
Overview and Installation Instructions 28
Operating Instructions 29

ELECTRICAL & HYDRAULIC SCHEMATICS 30
Overview and Electrical/Hydraulic Legend 30
Headlamps 31
Electrical/Harnesses 31
Typical LED Plow Light, Headlamp Control Module (HCM), and Harness Diagram 32
Typical LED Schematic 33
Typical Dual-Wire Halogen/LED Schematic 35
Dual-Wire Halogen/LED Installation 37
EdgeView™ Blade-Edge Illumination System 38
Electrical System Schematic – Straight Blade Snowplows 39
Hydraulic System Schematic – Straight Blade Snowplows 40
Attach Snowplow 41
Detach Snowplow 43
Raise 45
Lower 47
FLOAT 49
Angle Right 51
Angle Left 53
Scrape Lock / While in FLOAT 55
Pump Pressure Relief & Angle Left/Right Relief 56
Scrape Maxx Accessory Functions 57
FLOAT: Build Down Force 57
FLOAT: Maintain Down Force 59
FLOAT: Blade Rises to Follow Surface 62

TROUBLESHOOTING 63
How to Use the Troubleshooting Guide 63
Electrical Testing 63
Before You Begin 64
Vehicle Headlamps 65
Snowplow Headlamps 66
Snowplow Park/Turn Lamps 67
Snowplow DRL Lamps 68
Vehicle Lighting Check 69
Solenoid Coil Activation Test (SCAT) 70
Individual Solenoid Coil Test 72
Control/Cable/Plow Module Test 73
Motor and Motor Relay Test 74
Pump Pressure Test 75
Cartridge and Check Valve Removal 76
Relief Valve Inspection and Adjustment 77
Scrape Lock Adjustment 78
Replacing Damaged Bearing Sleeves 79

INTRODUCTION

This guide has been prepared to assist the trained mechanic in the service of SnowEx® snowplows. It also provides safety information and recommendations. We urge all mechanics to read this manual carefully before attempting to service the SnowEx snowplow equipment covered by this guide.

Service of your SnowEx snowplow equipment is best performed by your local SnowEx products outlet. They know your snowplow best and are interested in your complete satisfaction.

RECOMMENDED TOOLS

- Needle-nose pliers
- Flat screwdriver
- 12V test light
- Torque wrench
- Hex key set, including 3/8"
- Combination standard wrench set
- 1/4" drive ratchet set with 6" extension
- 3/8" drive ratchet set
- Standard socket: 1"
- Digital volt/ohmmeter
- Amp clamp
- Pressure test kit
- Flashlight
- Pick set
- Hammer
- Pencil magnet
- Mini fuses: 5A and 10A
- Vacuum pump w/3/8" NPT barbed fitting
- 3/8" NPT plug

AVAILABLE SERVICE ITEMS

- Motor Bearing Sleeve Repair Kit, PN 52251
- Pressure Test Kit, PN 85268
- Diagnostic Harness, PN 29290-2
- Seal Repair Tool, PN 52252
- 3-Port Isolation Module and Cab Control Tester: PN 41000-1
- Back Probe Harness: PN 28957

SAFETY DEFINITIONS

⚠ WARNING

Indicates a potentially hazardous situation that, if not avoided, could result in death or serious personal injury.

⚠ CAUTION

Indicates a potentially hazardous situation that, if not avoided, may result in minor or moderate injury. It may also be used to alert against unsafe practices.

NOTE: Indicates a situation or action that can lead to damage to your snowplow and vehicle or other property. Other useful information can also be described.

WARNING/CAUTION AND INSTRUCTION LABELS

Become familiar with and inform users about the warning and instruction labels on the back of the blade.

NOTE: If labels are missing or cannot be read, see your sales outlet.

Warning/Caution Label

Instruction Label

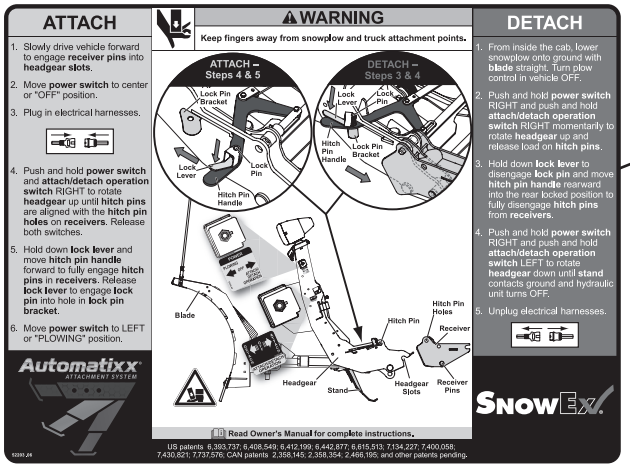

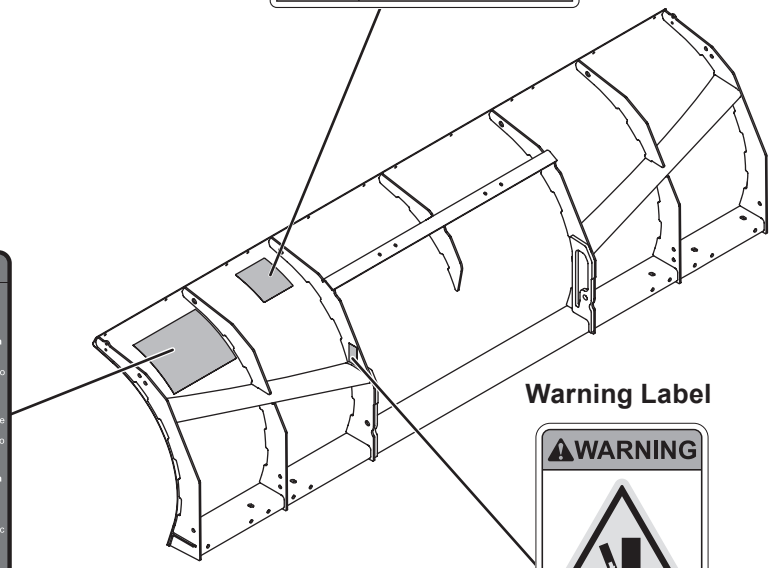

Warning Label

SAFETY PRECAUTIONS

Improper installation and operation could cause personal injury, and/or equipment and property damage. Read and understand labels and the Owner's Manual before installing, operating, or making adjustments.

⚠ WARNING

Lower the blade when the vehicle is parked. Temperature changes could change hydraulic pressure, causing the blade to drop unexpectedly or damaging hydraulic components. Failure to do this could result in serious personal injury.

⚠ WARNING

The driver shall keep bystanders clear of the blade when it is being raised, lowered, or angled. Do not stand between vehicle and blade or within 8 feet of a moving blade. A moving or falling blade could cause personal injury.

⚠ WARNING

Keep hands and feet clear of the blade and A-frame when mounting or removing the snowplow. Moving or falling assemblies could cause personal injury.

⚠ WARNING

Do not exceed GVWR or GAWR including blade and ballast. The rating label is found on driver-side vehicle door cornerpost.

⚠ WARNING

To prevent accidental movement of the blade, always turn the control OFF whenever the snowplow is not in use. The power indicator light will turn OFF.

⚠ WARNING

Remove blade assembly before placing vehicle on hoist.

⚠ CAUTION

Refer to the current online Power Match selection system for minimum vehicle recommendations and ballast requirements.

HYDRAULIC SAFETY

⚠ WARNING

Hydraulic fluid under pressure can cause skin injection injury. If you are injured by hydraulic fluid, get medical attention immediately.

⚠ CAUTION

Do not mix different types of hydraulic fluid. Some fluids are not compatible and may cause performance problems and product damage.

Always inspect hydraulic components and hoses before using. Replace any damaged or worn parts immediately.

If you suspect a hose leak, DO NOT use your hand to locate it. Use a piece of cardboard or wood.

Loosen hydraulic components slowly to relieve any residual pressure.

FUSES

The SnowEx® electrical and hydraulic systems contain several automotive-style fuses. If a problem should occur and fuse replacement is necessary, the replacement fuse must be of the same type and amperage rating as the original. Installing a fuse with a higher rating can damage the system and could start a fire. Fuse Replacement information, including fuse ratings and locations, is located in the Maintenance section of the Owner's Manual.

PERSONAL SAFETY

- Remove ignition key and put the vehicle in PARK or in gear to prevent others from starting the vehicle during installation or service.
- Wear only snug-fitting clothing while working on your vehicle or snowplow.
- Do not wear jewelry or a necktie, and secure long hair.
- Wear safety goggles to protect your eyes from battery acid, gasoline, dirt, and dust.
- Avoid touching hot surfaces such as the engine, radiator, hoses, and exhaust pipes.
- Always have a fire extinguisher rated BC handy, for flammable liquids and electrical fires.

FIRE AND EXPLOSION

Be careful when using gasoline. Do not use gasoline to clean parts. Store only in approved containers away from sources of heat or flame.

⚠ WARNING

Gasoline is highly flammable and gasoline vapor is explosive. Never smoke while working on vehicle. Keep all open flames away from gasoline tank and lines. Wipe up any spilled gasoline immediately.

CELL PHONES

A driver's first responsibility is the safe operation of the vehicle. The most important thing you can do to prevent a crash is to avoid distractions and pay attention to the road. Wait until it is safe to operate mobile communication equipment such as cell phones, text messaging devices, pagers, or two-way radios.

VENTILATION

BATTERY SAFETY

⚠ WARNING

Vehicle exhaust contains lethal fumes. Breathing these fumes, even in low concentrations, can cause death. Never operate a vehicle in an enclosed area without venting exhaust to the outside.

NOISE

⚠ CAUTION

Batteries normally produce explosive gases, which can cause personal injury. Therefore, do not allow flames, sparks, or lit tobacco to come near the battery. When charging or working near a battery, always cover your face and protect your eyes, and also provide ventilation.

- **Batteries contain sulfuric acid, which burns skin, eyes, and clothing.**
- **Disconnect the battery before removing or replacing any electrical components.**

Airborne noise emission during use is below 70 dB(A) for the snowplow operator.

VIBRATION

Operating snowplow vibration does not exceed 2.5 m/s^2 to the hand-arm or 0.5 m/s^2 to the whole body.

TORQUE CHART

⚠ CAUTION

Read instructions before assembling. Fasteners should be finger tight until instructed to tighten according to torque chart. Use standard methods and practices when attaching snowplow, including proper personal protective safety equipment.

Recommended Fastener Torque Chart

Inch Fasteners Grade 5 and Grade 8

Size	Torque (ft-lb) Grade 5	Torque (ft-lb) Grade 8	Size	Torque (ft-lb) Grade 5	Torque (ft-lb) Grade 8
1/4-20	8.4	11.9	9/16-12	109	154
1/4-28	9.7	13.7	9/16-18	121	171
5/16-18	17.4	24.6	5/8-11	150	212
5/16-24	19.2	27.3	5/8-18	170	240
3/8-16	30.8	43.6	3/4-10	269	376
3/8-24	35.0	49.4	3/4-16	297	420
7/16-14	49.4	69.8	7/8-9	429	606
7/16-20	55.2	77.9	7/8-14	474	669
1/2-13	75.3	106.4	1-8	644	909
1/2-20	85.0	120.0	1-12	704	995

Metric Fasteners Class 8.8 and 10.9

Size	Torque (ft-lb) Class 8.8	Torque (ft-lb) Class 10.9	Size	Torque (ft-lb) Class 8.8	Torque (ft-lb) Class 10.9
M6 x 1.00	7.7	11.1	M20 x 2.50	325	450
M8 x 1.25	19.5	26.9	M22 x 2.50	428	613
M10 x 1.50	38.5	53.3	M24 x 3.00	562	778
M12 x 1.75	67	93	M27 x 3.00	796	1139
M14 x 2.00	107	148	M30 x 3.50	1117	1545
M16 x 2.00	167	231	M33 x 3.50	1468	2101
M18 x 2.50	222	318	M36 x 4.00	1952	2701

These torque values apply to fasteners except those noted in the instructions.

INSTALLING THE EMERGENCY TRANSPORT CHAIN

The Chain Kit (PN 84787) is used to temporarily hold the blade and A-frame in a raised position during transport to a service location.

⚠ CAUTION

Read this document before installing the chain kit.

⚠ CAUTION

Use standard methods and practices when attaching snowplow and installing accessories, including proper personal protective safety equipment.

1. Raise the A-frame against the stacking stop by driving into a snow pile. The blade will naturally ride up the pile as you drive into the snow pile.
2. Stop the vehicle once the blade is raised. Shift the vehicle transmission to "PARK" and set the parking brake to prevent the vehicle from moving.
3. Turn the vehicle ignition to the "OFF" position and remove the key.
4. Exit the vehicle.
5. Clear snow from the area around and beneath the A-frame on either the driver's or passenger's side of the snowplow.
6. Secure the A-frame to the stacking stop cross bar using the chain with removable clevis link. Wrap the chain around the bottom of the A-frame tube and over the top of the stacking stop cross bar. Connect the chain together with the removable clevis link. Adjust the chain by selecting the best combination of links to minimize the amount of slack in the chain. The A-frame should be as close as possible to the stacking stop cross bar.
7. Install the two cotter pins into the clevis pins, securing the pins in the clevis link.
8. Transport the snowplow to the service location.

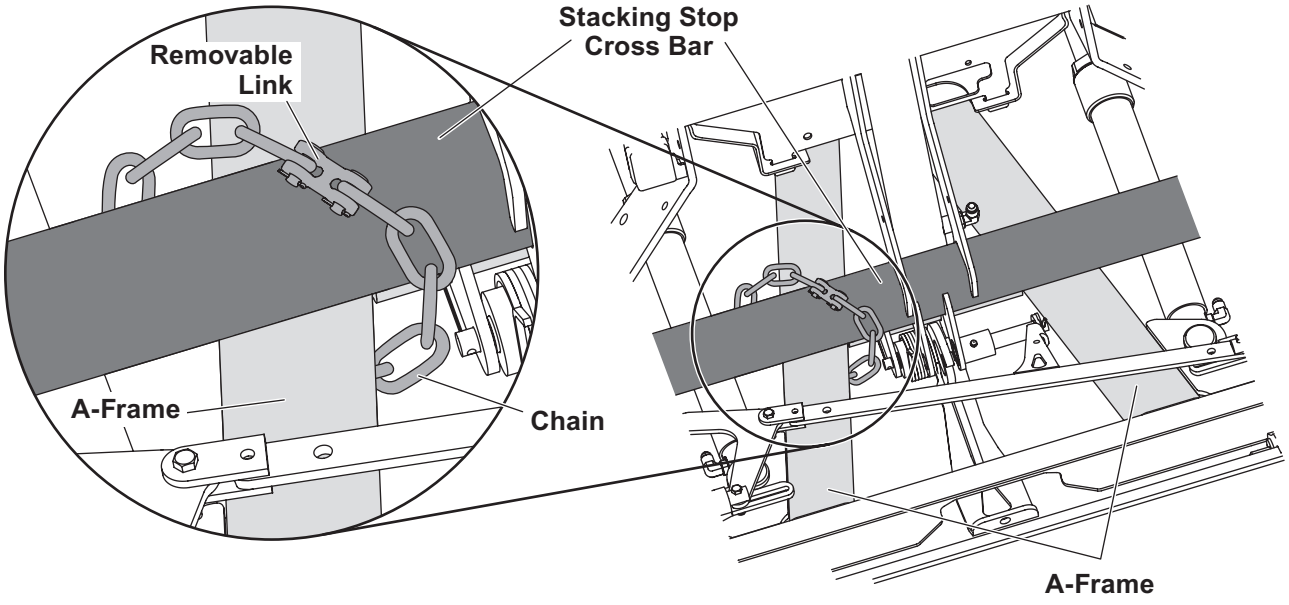

Adapted from Chain Kit Installation Instructions (Lit. No. 84788, Rev. 01).

AIMING HEADLAMP BEAMS

Tighten headlamp fasteners to 22 ft-lb or 30 N·m with rubber gasket once correct visual aim is achieved.

Park the vehicle on a level surface 25 feet in front of a matte-white screen, such as a garage door. The screen should be perpendicular both to the ground and to the vehicle centerline.

The vehicle should be equipped for normal operation. The snowplow blade should be in place and in raised position.

See that there is no load in the vehicle other than the driver and ballast as specified in the online snowplow selection system.

Below are steps listed by the Society of Automotive Engineers (SAE) pertinent to headlamp aiming in specification #SAE J599d.

1. Prepare the vehicle for headlamp aiming or inspection. Before checking beam aim, the inspector will:
   a. Remove ice or mud from under fenders.
   b. Set tire inflation pressures to the values specified on the vehicle information label.
   c. Check the springs for sag or broken leaves.
   d. Check the functioning of any automatic vehicle leveling systems and specific manufacturer's instructions pertaining to vehicle preparation for headlamp aiming.
   e. Clean the lenses.
   f. Check for bulb burnout and proper beam switching.
   g. Stabilize the vehicle suspension by rocking the vehicle sideways.
2. Mark (or tape) the vertical centerline of the snowplow headlamps and the vertical centerline of the vehicle on the screen. Mark the horizontal centerline of the snowplow headlamps on the screen (distance from ground to snowplow headlamp centers).
3. Align the top edge of the high-intensity zone of the snowplow lower beam below the horizontal centerline and the left edge of the high-intensity zone on the vertical centerline for each snowplow headlamp. (Refer to diagram below.)

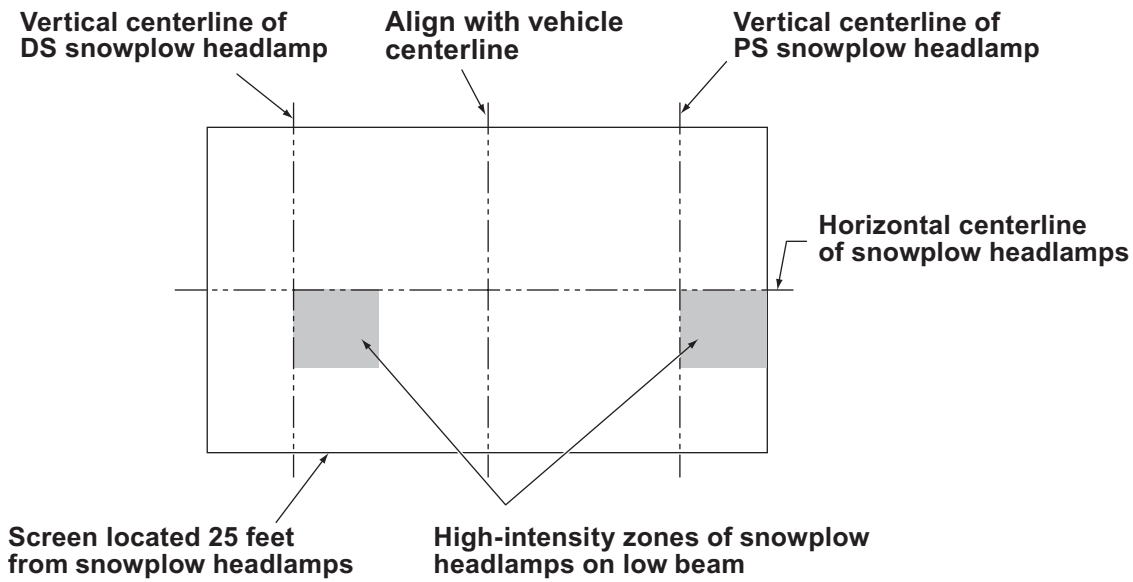

SnowEx® STRAIGHT BLADES – HYDRAULIC SYSTEM SPECIFICATIONS

The SnowEx straight blade hydraulic system delivers fast, uniform speed for lifting and angling, raising the blade in approximately 2 seconds and angling side to side in approximately 3.5 seconds.

The hydraulic unit has built-in scrape lock circuitry to prevent the blade from "floating up" while plowing deep snow or stacking snow into piles. To adjust the scrape lock setting, see the **Troubleshooting** section of this manual.

Pump Relief Valve Setting

- RD and LT snowplows: 1800 psi
  HD snowplow: 2000 psi

System Capacity

- Unit reservoir: 1-3/4 quarts
- System total: 2-3/8 to 2-3/4 quarts

Hydraulic Fluid

⚠ CAUTION

Do not mix different types of hydraulic fluid. Some fluids are not compatible and may cause performance problems and product damage.

Use SnowEx® RAPID ACTION hydraulic fluid rated to –40°F (–40°C) or other fluid conforming to military specification MIL-H-5606 A, such as Mobil Aero HFA or Shell AeroShell® Fluid 4. Use of products other than these recommended fluids may cause poor hydraulic system performance and damage to internal components.

AeroShell® is a registered (®) trademark of Shell Oil Company.

Pump Motor Specifications

LT Blades

12V DC with +/– connection
3" dia 0.8 kW motor
1800 +/– 50 psi pump relief valve
4000 psi crossover relief valve
425 psi scrape lock
0.000208 gal/rev pump
Hydraulic hose 1/4 SAE 100R1 and 3/8 SAE 100R17

RD Blades

12V DC with +/– connection
3" dia 0.8 kW motor
1800 +/– 50 psi pump relief valve
4000 psi crossover relief valve
425 psi scrape lock
0.000477 gal/rev pump
Hydraulic hose 1/4 SAE 100R1

HD Blades

12V DC with +/– connection
4.5" dia 1.5 kW motor
2000 +/– 50 psi pump relief valve
4000 psi crossover relief valve
425 psi scrape lock
0.000477 gal/rev pump
Hydraulic hose 1/4 SAE 100R1 and 3/8 SAE 100R17

Electrical (approximate values)

- Solenoid Coil Resistance = 7 ohm
- Solenoid Coil Amperage Draw = 1.5A
- Motor Relay Coil Resistance = 6–7 ohm
- Motor Relay Amperage Draw = 0.7A
- Maximum Motor Amperage Draw:
  - LT and RD Snowplows (3" motor) = 150–200A
  - HD Snowplows (4" motor) = 200–250A
- Switch Accessory Lead Amperage Draw = 0.75A

Vehicle Control Harness Fuses

3-Port Module (mini)

- Control and Park/Turn = 10A

Hydraulic Unit Harness Fuses

All (mini)

- 5A

SPECIFICATIONS, continued

Fastener Torque Specifications

Pump Cap Screws	5/16-18 x 2-1/4	150–160 in-lb
Motor Terminals (+ and –)	5/16-18 Nut	50–60 in-lb
Reservoir Screws	#10-24 x 5/16	30–35 in-lb
Solenoid Valves	7/8 Hex Head	19–21 ft-lb
Coil Nuts	3/4 Hex-Head Jam Nut	40–60 in-lb
Cover Screws	1/4-20 x 1/2 Shoulder Screw	60–80 in-lb
SAE O-Ring Plugs	1/8 or 5/32 Internal Hex	10–13 in-lb
Hydraulic Unit Mount Bolts	3/8-16 x 1	27–33 ft-lb
Check Valves	7/8 Hex Head	19–21 ft-lb
Motor Relay Small Terminals	#10-32 Nut	10–15 in-lb
Motor Relay Large Terminals	5/16-24 Nut	25–35 in-lb
Motor Relay Mount Screws	1/4-20 x 1/4	50–70 in-lb
Plow Module Mount Screws	1/4-20 x 5/8	60–70 in-lb
Angle Ram Piston Locknuts		90–100 ft-lb
Lift Ram Piston Nut		30–40 ft-lb
Angle & Lift Rams Gland Nuts		120–150 ft-lb
Pressure Switch	24mm Hex	10–13 ft-lb

HYDRAULIC UNIT COMPONENTS

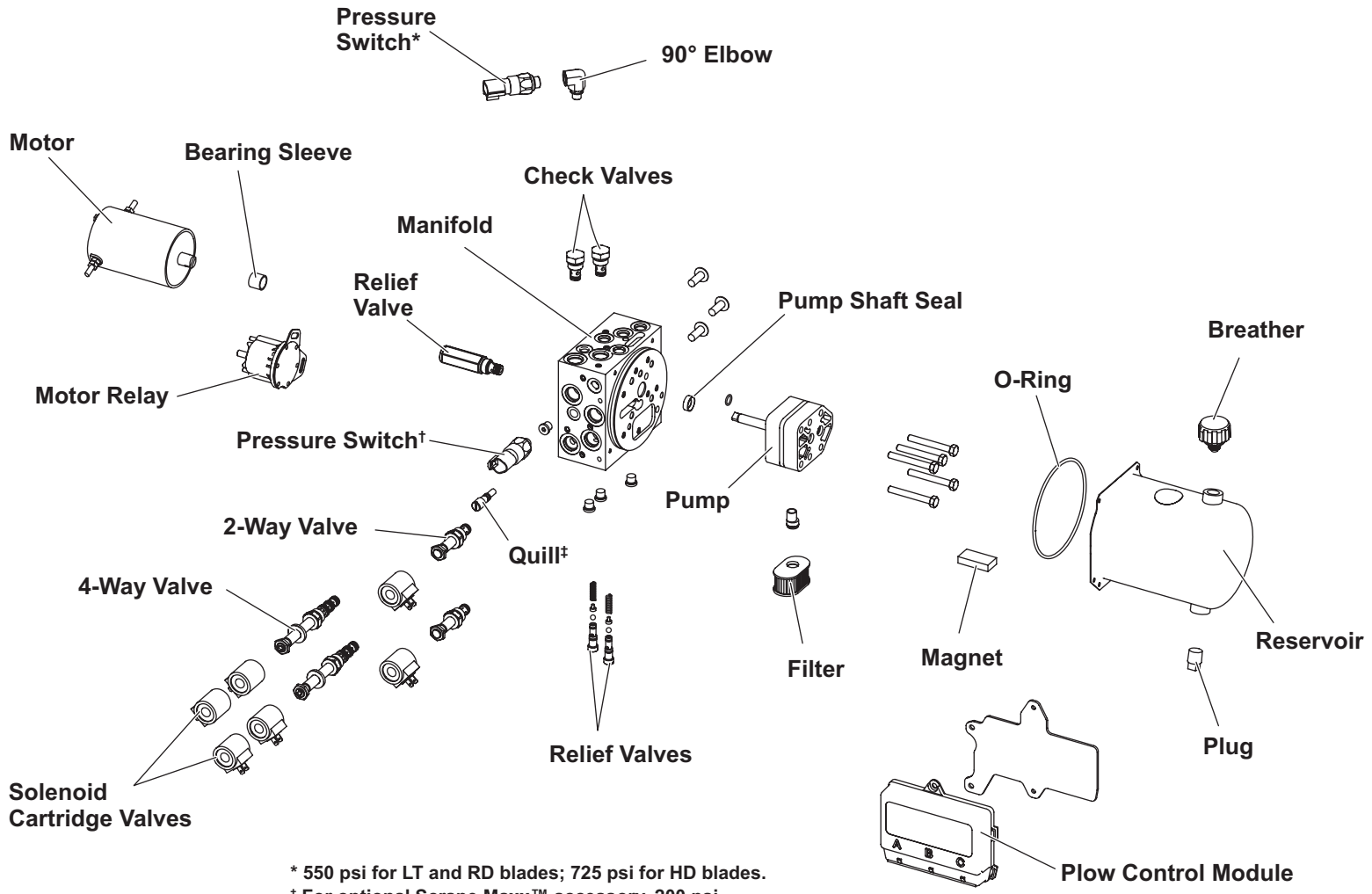

* 550 psi for LT and RD blades; 725 psi for HD blades.
† For optional Scrape Maxx™ accessory, 200 psi.
‡ Blade drop speed adjustment.

VALVE LOCATIONS

Solenoid Cartridge Valves		
Coil	**Valve Type**	**Wire Color**
S1	SV08-2211	PINK
S2C1 (Top)	SV08-47D	DARK GREEN
S2C2 (Bottom)		PURPLE
S3C1 (Top)	SV08-47C	YELLOW
S3C2 (Bottom)		BROWN
S4	SV08-2211	BLUE

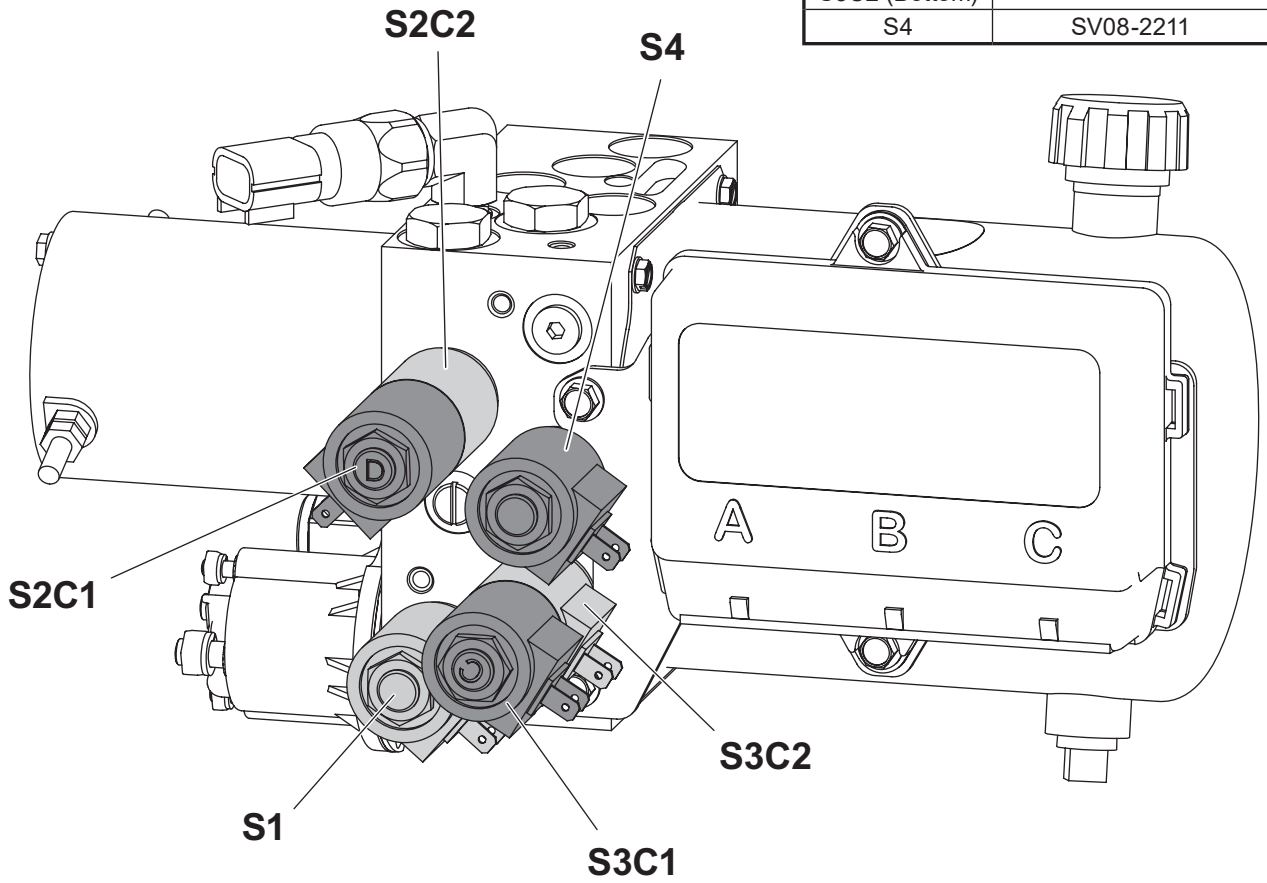

CARTRIDGE VALVES

The SnowEx® straight blade snowplow hydraulic system performs five blade movement functions and two blade attachment functions. For installations that include the optional Scrape Maxx™ kit, the hydraulic system also applies the downward force that prevents the blade from floating up.

All functions require the vehicle ignition (key) switch to be in the "ON" or "ACCESSORY" position and the power to be activated on the snowplow cab control.

Three of the blade movement functions require energizing the electric motor and opening solenoid cartridge valves. The LOWER function does not energize the motor but requires the opening of two cartridge valves. The FLOAT function does not energize the motor but requires the closing of one cartridge valve once the blade has been lowered.

Power from the vehicle battery is supplied to the solenoid coils and the motor relay via the plow module. The solenoid cartridge valves operate in various combinations, directed by the cab control, to send hydraulic fluid to the snowplow lift and angle rams or back to the reservoir. (Power is supplied to the plow module via the battery cable and motor relay connection.)

		Blade Movement Functions					Automatixx® System		Scrape Maxx Feature (optional kit)	
Solenoid		RAISE ↑	LOWER ↓	FLOAT	ANGLE RIGHT	ANGLE LEFT	ATTACH PLOW	DETACH PLOW	BUILD PRESSURE TO 200 psi	CYCLE TO MAINTAIN 200 psi
Motor	M	ON			ON	ON	ON	ON	ON	ON/OFF
SV08-2211	S1		ON	ON			ON		ON	*
SV08-47D	S2C1	ON						ON		
	S2C2						ON		ON	ON/OFF
SV08-47C	S3C1					ON				
	S3C2				ON					
SV08-2211	S4	ON	ON					ON		

* S1 remains in open position.

CHECK VALVES

A check valve (CV) allows fluid to flow in only one direction.

Tighten check valves to **19–21 ft-lb**.

Check Valves	
CV1	CV08-2059
CV2	

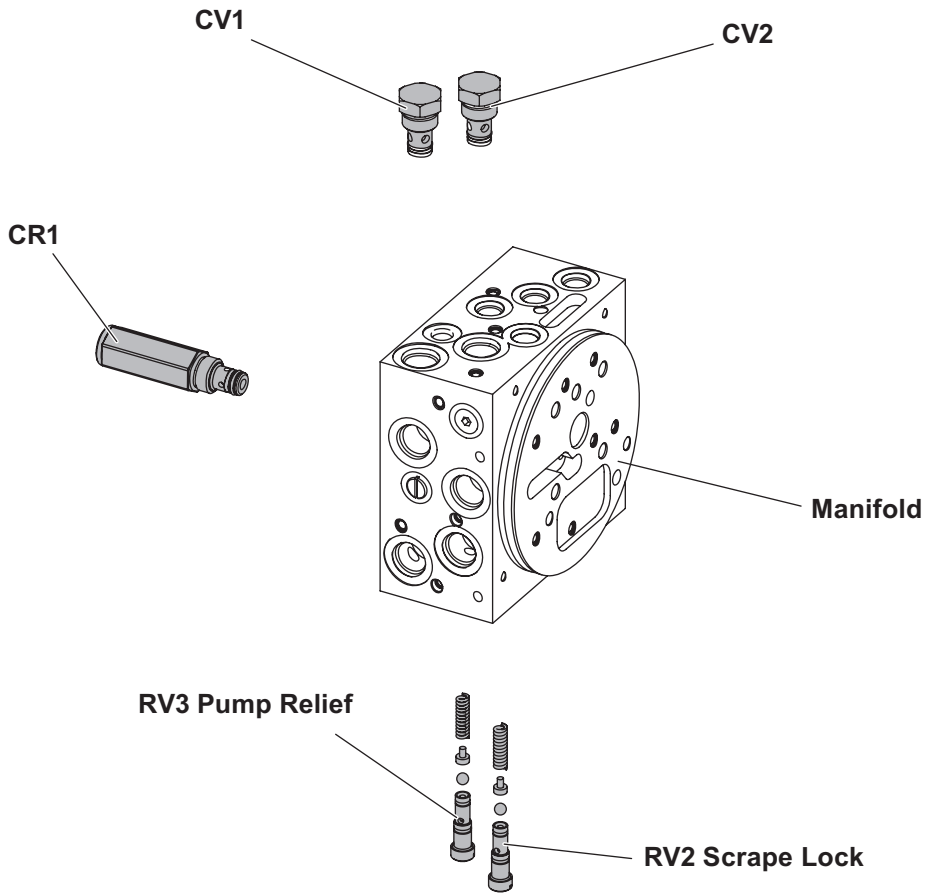

RELIEF VALVES

Hydraulic fluid is trapped in the base end of the cylinder by the inactivated S3 solenoid cartridge valve and the bidirectional relief valve.

If one side of the snowplow contacts an object while plowing, the force of the impact increases hydraulic pressure in the base end of the cylinder. When pressure exceeds the nominal setting value of the bidirectional relief valve, it opens to allow hydraulic fluid to flow to the base end of the opposite cylinder.

The bidirectional relief valve is not adjustable.

For more detail, see the "Angle Left/Right Relief" and "Pump Relief" pages in the **Electrical & Hydraulic Schematics** section of this guide.

Relief Valve Settings		
CR1	Crossover Relief (bidirectional)	4000 psi
RV2	Lift Ram Base End (scrape lock)	425 psi
RV3	Pump Relief	LT: 1800 psi RD: 1800 psi HD: 2000 psi

HYDRAULIC FITTING AND HOSE INSTALLATION

NOTE: Overtightening JIC hose fitting ends will result in a fractured fitting.

DO NOT use thread sealant/tape on hydraulic hoses or fittings. These materials could damage the product. Always use two wrenches to ensure proper tightening of fittings and hoses.

To install SAE O-ring fittings in the valve block and rams:

1. Turn the jam nut on the fitting as far back as possible.
2. Lubricate the O-ring with clean hydraulic fluid.
3. Screw the fitting into the port by hand until the washer contacts the port face and the shoulder of the jam nut threads.
4. Unscrew the fitting to its proper position; no more than one full turn.
5. Using two wrenches, hold the fitting body in position and tighten the jam nut until the washer again contacts port face, then tighten an additional 1/8 to 1/4 turn to lock the fitting in place. Final torque on the jam nut should be approximately 20 ft-lb.

To install hydraulic hoses:

1. Screw the flare nut onto the fitting flare and hand tighten it.
2. Align the hose so that there are no twists or sharp bends and so that it will not be pinched or pulled by moving parts.
3. Using a pair of adjustable pliers, hold the hose in position, and use a wrench to tighten the flare nut 1/8 to 1/4 turn beyond hand tight. Final torque on the flare nut should be approximately 20 ft-lb.
4. Reinstall any protective hose wraps in their original positions.

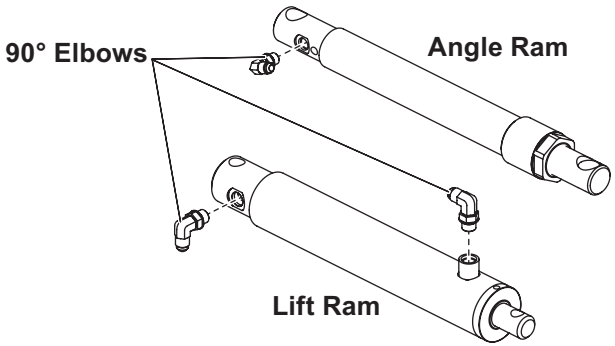

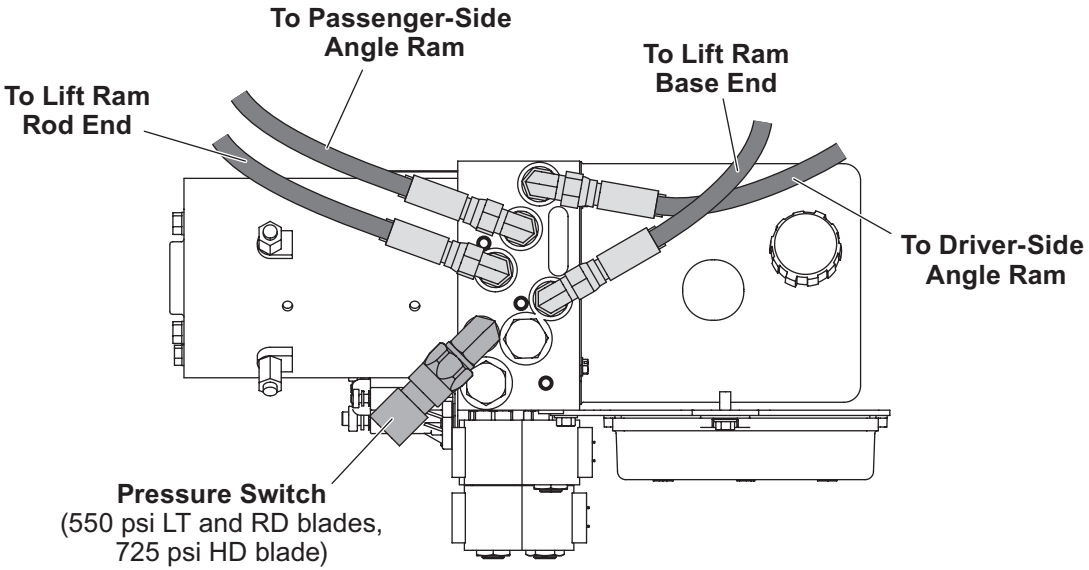

HD Unit Shown

BLADE DROP SPEED ADJUSTMENT

⚠ WARNING

Keep 8' clear of the blade when it is being raised, lowered, or angled. Do not stand between vehicle and blade or directly in front of the blade. If the blade hits or drops on you, you could be seriously injured.

The quill in the valve manifold adjusts the blade drop speed.

1. Lower the blade to the ground before making the adjustment.
2. Remove the hydraulic unit cover.
3. Turn the quill IN (clockwise) to decrease the drop speed. Turn the quill OUT (counterclockwise) to increase the drop speed.

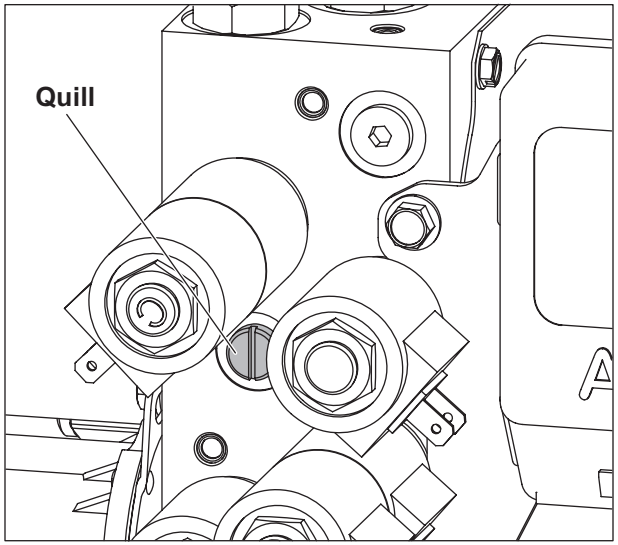

4. Replace the hydraulic unit cover.

OVERVIEW

⚠ WARNING

To prevent accidental movement of the blade, always push the ON/OFF button to switch the control OFF whenever the snowplow is not in use. The power indicator light will turn OFF.

SnowEx® straight blade snowplows can be operated by a POWER GRIP™ 9-button hand-held control or by a joystick-style control.

Both types of cab controls are equipped with an ON/OFF button or switch and an indicator light to show when the control is powered ON or OFF. The cab control is powered by the vehicle's battery, so the vehicle ignition (key) switch must be ON to use the control.

The ON/OFF button or switch allows the operator to turn OFF the control and prevent blade movement even when the vehicle ignition switch is ON.

The ON/OFF button or switch also serves as an emergency stop, if required.

Controls are also used to program the SECURITY GUARD™ anti-theft system and activate the optional Scrape Maxx™ down force feature (requires installation of the 84854-1 Scrape Maxx kit).

All controls are protected by a replaceable fuse located in the under-hood snowplow electrical system. See "Fuse Replacement" in the Maintenance section of the Owner's Manual.

The control is able to sense a lack of communication with the electrical system. Should the indicator light start to flash, refer to "Control/Cable/Plow Module Test" in the **Troubleshooting** section of this guide.

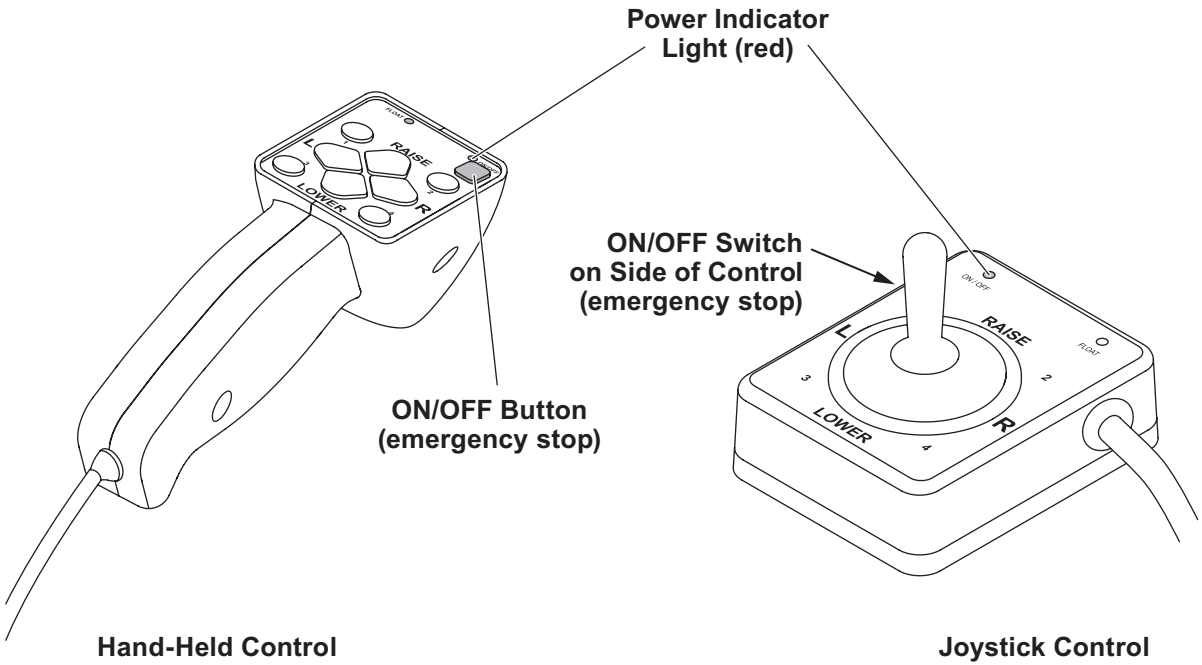

OPERATING THE POWER GRIP™ HAND-HELD CONTROL

⚠ WARNING

The driver shall keep bystanders clear of the blade when it is being raised, lowered, or angled. Do not stand between vehicle and blade or within 8 feet of a moving blade. A moving or falling blade could cause personal injury.

1. Turn the vehicle ignition switch to the "ON" or "ACCESSORY" position.
2. Press the ON/OFF button on the control. The power indicator light glows red, indicating that the control and vehicle ignition switch are both ON and the electrical connections to the snowplow are completed.

   The ON/OFF button operates as an emergency stop, if required.

   The round buttons numbered 1, 2, 3, and 4 operate the SECURITY GUARD™ system. See the **SECURITY GUARD System** section of this guide for instructions.

   Button "4" plus the ON/OFF button are used to toggle the optional Scrape Maxx™ down force feature ON and OFF.

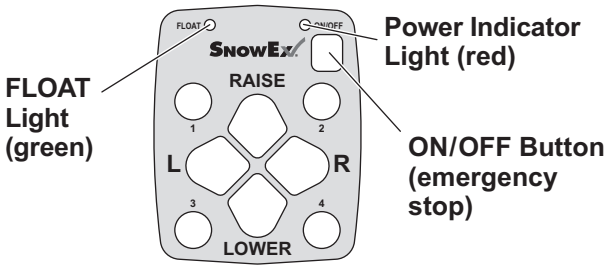

Function Time-Outs

All control functions, except LOWER/FLOAT, time out (stop) automatically after a period of time. This is to limit the amount of electrical energy required from the vehicle.

The RAISE function times out after 3.0 seconds. Angle Right and Angle Left functions time out after 3.5 seconds.

NOTE: If a control function times out before the desired blade movement is complete, release the button and press it again.

Automatic Shutdown

The control will automatically turn OFF after being idle for 20 minutes. To reactivate the control after a shutdown, press the ON/OFF button.

Smooth Stop and One-Touch FLOAT Features

When the Smooth Stop feature is active, the control automatically allows the blade to coast to a stop when a control button is released. When the One-Touch FLOAT feature is active, the control will immediately activate the FLOAT mode without requiring the LOWER button to be held down.

For instructions on enabling/disabling these features, see the **FLEET FLEX Electrical System** section of this guide.

Control Functions

Raise, Lower, Float, Angle

Pressing the four diamond-shaped buttons in the center of the control face will result in the blade movements described in the following table.

Function	Description of Operation
RAISE	Press this button to raise the blade and cancel the FLOAT mode.
LOWER	Press this button to lower the blade. Release the button to stop the blade at desired height.
FLOAT†	Press the **LOWER** button and hold 3/4 second to activate this mode. The green FLOAT light in the upper left corner of the control face will illuminate. The blade will lower to the ground surface and follow the contour of the surface as it dips or rises. Function does not time out; however, the control will shut down after 20 minutes of nonuse. Press the **RAISE** button momentarily to cancel FLOAT. Angling left or right will not interrupt (pause) the FLOAT function.
L (Angle Left)	Press this button to angle the blade left.
R (Angle Right)	Press this button to angle the blade right.

† FLOAT mode activates immediately when the One-Touch FLOAT feature is enabled. See the **FLEET FLEX Electrical System** section for more information.

OPERATING THE JOYSTICK CONTROL

⚠ WARNING

The driver shall keep bystanders clear of the blade when it is being raised, lowered, or angled. Do not stand between vehicle and blade or within 8 feet of a moving blade. A moving or falling blade could cause personal injury.

1. Turn the vehicle ignition switch to the "ON" or "ACCESSORY" position.
2. Slide the switch on the side of the control to the "ON" position. The power indicator light glows red, indicating that the control is ON. The indicator light glows red whenever the control and the vehicle ignition switch are both ON and the electrical connections to the snowplow are completed.

The ON/OFF switch operates as an emergency stop, if required.

Button "4" and the ON/OFF button are used to toggle the optional Scrape Maxx™ down force feature ON and OFF. For information about the Scrape Maxx kit, see the **Scrape Maxx Down Force Kit** section of this guide.

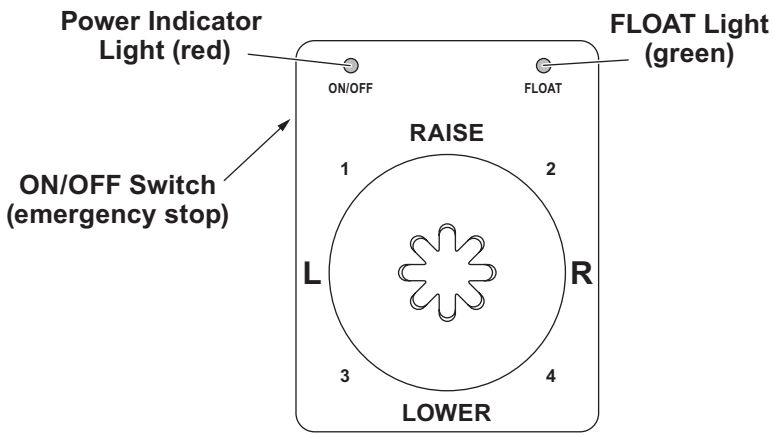

Function Time-Outs

All control functions, except LOWER/FLOAT, time out (stop) automatically after a period of time. This is to limit the amount of electrical energy required from the vehicle.

The RAISE function times out after 3.0 seconds. Angle Right and Angle Left functions time out after 3.5 seconds.

NOTE: If a control function times out before the desired blade movement is complete, release the lever to the center position, then move it back into the desired function.

Automatic Shutdown

The control will automatically turn OFF after being idle for 20 minutes. To reactivate the control after a shutdown, move the ON/OFF switch to OFF, then back to ON.

Smooth Stop and One-Touch FLOAT Features

With the Smooth Stop feature enabled, the control automatically allows the blade to coast to a stop when the lever returns to center position. With the One-Touch FLOAT feature enabled, the control immediately activates the FLOAT mode without requiring the lever to be held in the LOWER position. For instructions on enabling/disabling these features, see the **FLEET FLEX Electrical System** section of this guide.

OPERATING THE JOYSTICK CONTROL, *continued*

Joystick Control Lever Movement

From the center position, the control lever can be moved in one of eight directions to control various movements of the snowplow blade. To change from one movement of the blade to another, the control lever must be moved back to the center position before selecting the desired function. Whenever the lever is released, it should spring back into the center position to stop any blade movement.

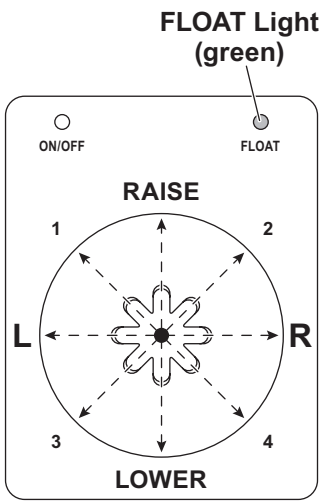

Moving the control lever diagonally from the center position toward any of the four digits on the face of the control body will operate the SECURITY GUARD™ system. For instructions, see the **SECURITY GUARD System** section of this guide.

Control Functions

Raise, Lower, Float, Angle

Moving the control lever straight up and down or from side to side on the control body will result in the blade movements described in the following table.

Function	Description of Operation
RAISE	Move the control lever toward the top of the control body to raise the blade and cancel the FLOAT mode.
LOWER	Move the control lever toward the bottom of the control body to lower the blade. Release the lever to stop the blade at desired height.
FLOAT†	Move the control lever to the **LOWER** position and hold 3/4 second to activate this mode. The FLOAT light in the upper right corner of the control face will illuminate. The blade will lower to the ground surface and follow the contour of the surface as it dips or rises. Function does not time out; however, the control will shut down after 20 minutes of nonuse. Move the lever to the **RAISE** position momentarily to cancel FLOAT. Angling left or right will not interrupt (pause) the FLOAT function.

Function	Description of Operation
L (Angle Left)	Move the control lever straight to the left to angle the blade left.
R (Angle Right)	Move the control lever straight to the right to angle the blade right.

† FLOAT mode activates immediately when the One-Touch FLOAT feature is enabled. See the **FLEET FLEX Electrical System** section for more information.

SMOOTH STOP AND ONE-TOUCH FLOAT FEATURES

Smooth Stop

Smooth stop, or soft stop, allows the blade to coast to a stop when the button/lever is released. The result is smoother operation, reduction in shock to the hydraulic system, and longer hose and valve life.

While there are advantages to having this feature, there are also advantages to temporarily disabling it. For example, disabling smooth stop allows for more precise movements of the blade while operating close to buildings and other obstacles.

All controls come standard with this feature ENABLED.

One-Touch FLOAT

One-touch FLOAT immediately activates the FLOAT mode and releases the blade to the ground, without requiring the operator to hold down the LOWER button or hold the control lever in LOWER. This can improve transition time when backing up to plow forward again, eliminating the time spent holding the control and waiting for the blade to fully drop.

All controls come standard with this feature DISABLED.

Enable/Disable Procedure

To enable/disable the One-Touch FLOAT and smooth stop features, perform the following steps.

Performing the sequence multiple times will toggle the feature between enabled and disabled.

1. Turn the vehicle ignition switch to the "ON" or "ACCESSORY" position. (It is not necessary to start the vehicle.)
2. Verify that the control power indicator is OFF. If the power indicator light is red, the control is ON. Move the ON/OFF switch to "OFF" or push the ON/OFF button to turn the control OFF.
3. **Smooth Stop:** Move and hold the control lever to the "R" position, or press and hold the "R" button, while turning the control ON.

   One-Touch Float: Move and hold the control lever to the "LOWER" position, or press and hold the "LOWER" button, while turning the control ON.

   The power indicator light will turn ON and the FLOAT light will flash, indicating the status of the feature.

Light Flash Indicators	
Light	**Description**
POWER – Red	Solid ON = Control is ON
FLOAT – Green	1 Flash = Feature is *disabled* 2 Flashes = Feature is *enabled*

SECURITY GUARD™ SNOWPLOW ANTI-THEFT SYSTEM

Activation & Establishing a 4-Digit Security Code

NOTE: The snowplow must be attached to the vehicle, and all the electrical connections must be connected, prior to activating the security code function.

1. Turn the vehicle ignition switch to the "ON" or "ACCESSORY" position. (It is not necessary to start the vehicle.)
2. Verify that the control power indicator is OFF. If the power indicator light is red, the control is ON. Move the ON/OFF switch to "OFF" or push the ON/OFF button to turn the control OFF.
3. To activate the SECURITY GUARD mode, move the control lever to the #1 position or press the #1 button four consecutive times, and then move the lever to the #4 position or press the #4 button four consecutive times (sequence: 1, 1, 1, 1, 4, 4, 4, 4). The green FLOAT light will flash quickly and the red power indicator light will turn ON, indicating that the system is ready to accept your 4-digit security code.

   Enter your 4-digit security code by moving the control lever to (or pressing the button for) any four of the eight following positions: UP, DOWN, LEFT, RIGHT, 1, 2, 3, or 4.

   Once you have entered your security code, the FLOAT light will stop flashing and the power indicator light will turn OFF. This indicates that your security code is entered and stored in the SECURITY GUARD system.
4. Once a 4-digit security code is established, the SECURITY GUARD system will recognize any FLEET FLEX control that has been programmed with the same 4-digit security code. If a control not programmed with the correct 4-digit security code is connected to the system, the established security code will have to be entered manually before the snowplow can be activated (see the Manual Unlock instructions).

NOTE: If the control is turned ON prior to completing the programming procedure, your 4-digit security code will be canceled.

Manual Unlock

If the SECURITY GUARD system is activated and you are using a FLEET FLEX control with a different 4-digit code than the established security code, you will be required to manually enter the 4-digit security code before operating a locked snowplow.

1. Turn the vehicle ignition to the "ON" or "ACCESSORY" position.
2. Move the ON/OFF switch to the "ON" position or push the ON/OFF button to switch the control ON.
3. The power indicator light will flash rapidly, indicating that the snowplow is locked.
4. Enter the 4-digit security code.
5. After the correct security code is entered, the power indicator light will change from flashing rapidly to a solid light to indicate that the snowplow has been successfully unlocked.

NOTE: If the snowplow/vehicle electrical connection is lost or disconnected, the SECURITY GUARD system will reset, requiring any FLEET FLEX control that is not programmed with the established 4-digit security code to manually re-enter the security code to activate the snowplow.

SECURITY GUARD™ Snowplow Anti-Theft System, *continued*

Clearing an Established 4-Digit Security Code

1. Turn the vehicle ignition switch to the "ON" or "ACCESSORY" position.
2. If the snowplow is locked (the control power indicator light will be flashing rapidly), unlock the snowplow by following the Manual Unlock procedure described above.
3. Move the ON/OFF switch to the "OFF" position or push the ON/OFF button to switch the control OFF. Verify that the power indicator light is OFF.
4. With the control OFF, move the control lever to the #2 position or press the #2 button four consecutive times, then move the lever to the #3 position or press the #3 button four consecutive times. This sequence (2, 2, 2, 2, 3, 3, 3, 3) will clear the 4-digit security code from the SECURITY GUARD system. The FLOAT light will flash to indicate that the 4-digit security code was cleared.

NOTE: To enter a new 4-digit security code, see "Activation & Establishing a 4-Digit Security Code."

Light Flash Indicators

POWER – Red	Function
OFF	Control is OFF
Solid ON	Control is ON and active
Slow Flash	No communication
Fast Flash	Snowplow is locked—enter 4-digit security code to unlock

FLOAT – Green	Function
Solid ON	FLOAT function is active
Fast Flash	Security code activation in progress

Additional Notes

- The SECURITY GUARD system requires any control (other than the one with the assigned 4-digit security code) to enter the security code before the snowplow can be activated. Once the security code is established, the SECURITY GUARD system recognizes that a control with the same security code is attached, and *does not* require a manual unlock to activate the snowplow. The system will recognize the control as "safe" and will automatically unlock.
- The SECURITY GUARD system is only fully functional with joystick controls PN 84450 and 85800, or hand-held controls PN 84400 and 85805.
- In the event that a snowplow is locked and cannot be manually unlocked or reset, contact your authorized dealer.
- REMINDER: Record your security code for future reference.

SECURITY GUARD™ Snowplow Anti-Theft System, *continued*

Hand-Held Master Control

Universal Clear Security

Perform the following steps to unlock and clear an established security code without using the original control that was used to establish the code. This procedure should be used to reset the module if the security code is unknown.

IMPORTANT: The following steps must be performed using the Distributor Master Control (PN 78800). Only the Distributor Master Control can clear an established code within a snowplow module without using the original control used to establish the code.

⚠ WARNING

To prevent accidental movement of the blade, always push the ON/OFF button to switch the control OFF whenever the snowplow is not in use. The power indicator light will turn OFF.

1. Turn the vehicle ignition to the "OFF" position.
2. With the control power OFF, using the tool that was included in the Distributor Master Control box, place the tool over the keypad and push down on the plate.

NOTE: The only button that should be exposed is the LOWER button. All other buttons should be engaged and pressed down.

3. While pushing down on the plate, turn the ignition ON.
4. Upon turning the ignition to the "ON" position, the system will reset and no security code will be associated with the snowplow.

Position the Master Control Plate on the keypad so that only the LOWER button is exposed.

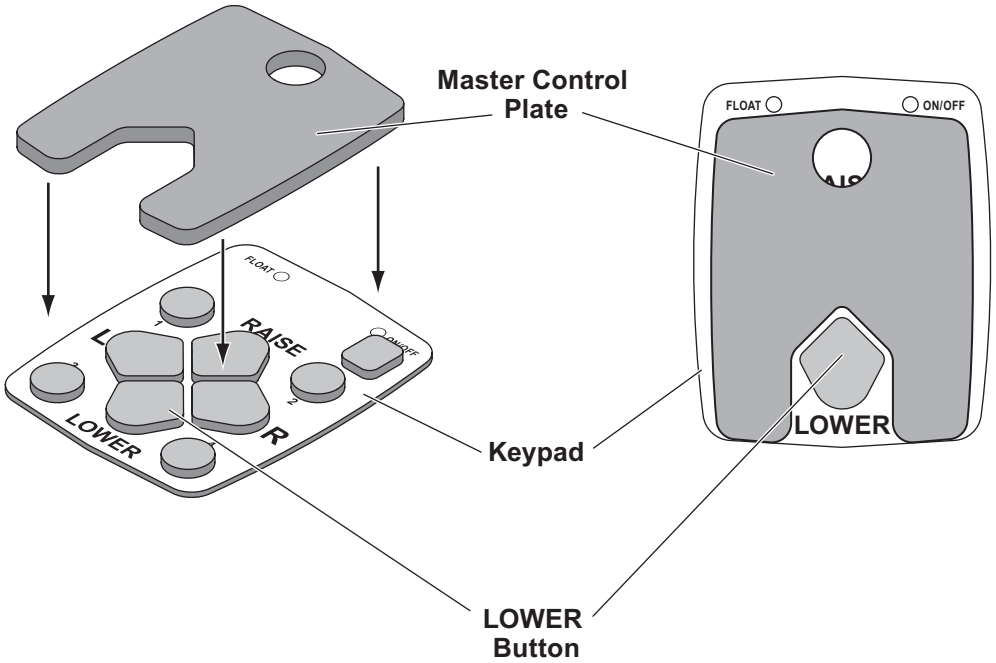

HARNESS DIAGRAM – 3-PORT ISOLATION MODULE

⚠ CAUTION

On 2-plug electrical systems, plug covers shall be used whenever snowplow is disconnected. Before 2019 vehicle battery cable is 12V unfused source.

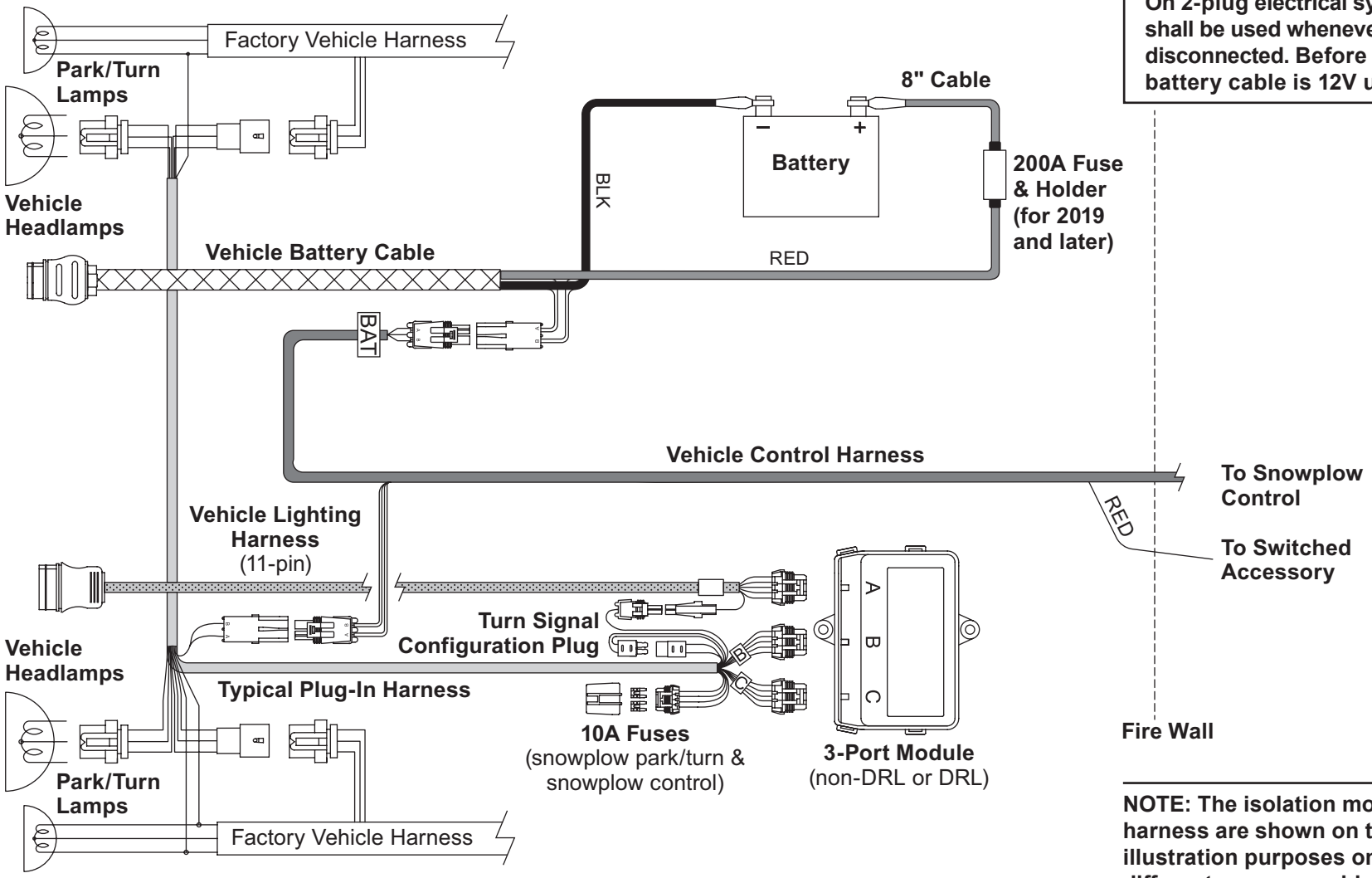

NOTE: The isolation module and plug-in harness are shown on the driver's side for illustration purposes only. Location may be different on some vehicles.

3-PORT ISOLATION MODULE OVERVIEW

The isolation module acts as an electrical hub, automatically directing vehicle power to the appropriate vehicle or snowplow lighting devices, while also supplying battery power to the snowplow cab control.

The vehicle high and low beams enter and exit the isolation module through position B (left-side lighting) and position C (right-side lighting). Park, turn, and DRL (day-time running light) signals also enter through positions B and C.

The output of the vehicle high beam/low beam select switch is directed to the isolation module via the plug-in harness. When the snowplow is not attached to the vehicle, the signal passes through the normally closed relay contacts to the vehicle headlamps. During this time, the isolation module is inactive, placing no current draw on the vehicle's electrical system.

With the snowplow attached, the isolation module is still inactive until either the vehicle parking lamps are turned ON or the vehicle ignition switch is turned ON.

Turning ON the vehicle parking lamps activates a series of relays, automatically transferring the vehicle high and low beams to the snowplow while supplying battery power directly to the snowplow parking lamps. All snowplow lighting exits the isolation module through position A.

Turning ON the vehicle ignition switch energizes a snowplow control relay, supplying vehicle battery power directly to the control via the vehicle control harness and plug-in harness. The vehicle ignition switch also supplies power to the vehicle turn signals. Activating the vehicle turn signals energizes turn signal circuit, which supplies vehicle battery power directly to the snowplow turn signals.

NOTE: References to "left" and "right" are correct for modules located on the driver's side of the vehicle. The turn signal plug must be reversed for passenger-side installations.

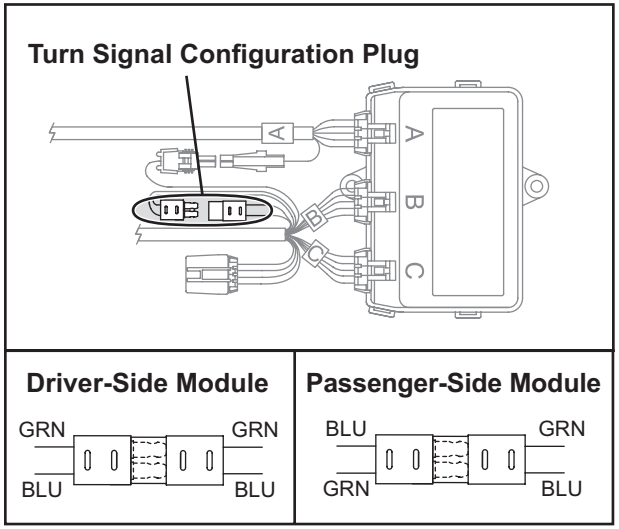

3-Port Isolation Module Function, *continued*

Snowplow Not Attached to Vehicle

System is inactive. Vehicle lighting system functions normally.

Reason: No ground to module.

Snowplow Attached to Vehicle

System is inactive until either the switched accessory wire or the vehicle parking lamps are activated. Vehicle and snowplow lighting systems function as outlined in the Overview, above.

Reason: Ground path is established from battery common to pin C on port A of the 3-port module via the following harnesses: vehicle battery cable, vehicle control harness, adapter, plug-in harness, vehicle lighting harness, and snowplow lighting harness.

- Activating a **switched accessory** wire (a key-controlled power source) applies battery voltage to the VACC input of the module. A control circuit senses the voltage and energizes the coil of the control power relay (part of the 3-port module). Energizing the coil of the control power relay causes the relay contacts to shift from the "N.O." (normally opened) position to the "N.C." (normally closed) position, which supplies battery voltage to the snowplow control via the plug-in harness and the vehicle control harness. The switched accessory wire only controls battery voltage to the snowplow control.
- Activating the vehicle **park lamp** circuit applies voltage to the module park circuit input. A control circuit senses the voltage and turns ON a solid state power device, which applies battery voltage to the snowplow park lamp filaments via the vehicle and snowplow lighting harnesses.
- With the park lamp circuit energized, the control circuit monitors the **vehicle high and low beam** inputs. When battery voltage is sensed, the appropriate solid state power devices are turned ON, supplying battery voltage to the snowplow headlamps via the vehicle and snowplow lighting harnesses. Toggling the dimmer switch between high and low beam will toggle the snowplow high and low beams.
- Activating the **turn signal** applies voltage to the module turn signal circuit input. A control circuit senses the voltage and turns ON a solid state power device, which applies battery voltage to the snowplow turn signal lamp filaments via the vehicle and snowplow lighting harnesses.
- **On vehicles equipped with DRLs integrated into the vehicle headlamps:** Activation of the switched accessory wire (a key-controlled power source) port C, position C, applies battery voltage to the module's high and low beam relay coils, which causes the relay contacts to shift from the "vehicle" to the "snowplow" position. **This module will transfer the vehicle headlamp DRLs to the snowplow (turns OFF vehicle DRLs).**
- **On vehicles equipped with dedicated DRL bulbs or vehicles using the turn signals as DRLs,** this module will not turn OFF the vehicle bulbs. While the vehicle is in the DRL mode this module will illuminate the snowplow turn signal lamp filaments.

See the **Electrical and Hydraulic Schematics** section of this guide for diagrams of headlamp and DRL functions.

OVERVIEW

The Scrape Maxx™ accessory supplements the built-in scrape lock function by adding active downward pressure to keep the blade in contact with the surface while plowing or back dragging. When the Scrape Maxx mode is enabled, the hydraulic pump will cycle ON/OFF automatically to maintain downward pressure at 200 psi whenever the blade is in FLOAT mode.

The Scrape Maxx accessory kit is compatible with LT, RD, and HD straight blade snowplows. It does not affect the operation of One-Touch FLOAT.

The switch adapter included in the 84854 kit is required only when installing the Scrape Maxx pressure switch on some early straight blade snowplows.

Excerpted from Scrape Maxx™ Down Force Kit Installation and Operating Instructions. (Lit. No. 84863, Rev. 01).

INSTALLATION INSTRUCTIONS

⚠ WARNING

The driver shall keep bystanders clear of the blade when it is being raised, lowered, or angled. Do not stand between vehicle and blade or within 8 feet of a moving blade. A moving or falling blade could cause personal injury.

⚠ WARNING

Keep 8' clear of the blade when it is being raised, lowered, or angled. Do not stand between vehicle and blade or directly in front of the blade. If the blade hits or drops on you, you could be seriously injured.

⚠ CAUTION

Install this kit with the snowplow attached to the vehicle, or with the headgear securely supported in the vertical position. Failure to follow this step will result in release of pressurized hydraulic fluid and unexpected headgear movement.

1. Park the vehicle on a smooth, level, hard surface, such as concrete. Move the blade to center position and lower it to the ground.
2. Activate FLOAT mode by holding the LOWER button (hand-held control) or holding the lever in "LOWER" position (joystick control) for 3/4 second. Turn the cab control OFF.
3. Remove the hydraulic unit cover. Remove the reservoir breather.

NOTE: Loosen breather slowly to relieve any pressure in the reservoir.

4. Remove the -4 O-ring boss plug on the front of the hydraulic unit. Retain the boss plug for reinstallation if the pressure switch is later removed.

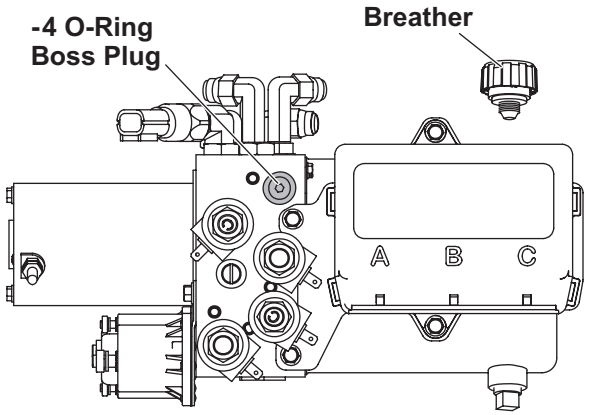

5. Install the pressure switch in place of the O-ring boss plug. Gripping the hex portion only, tighten the pressure switch to 10–13 ft-lb.

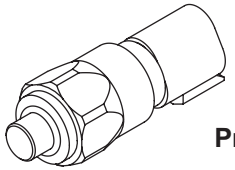

Scrape Maxx Kit Installation, *continued*

6. Reinstall the reservoir breather.
7. Locate the black connector with two gray wires on the harness connected to the B port of the plow module. Remove the jumper plug from the connector. Retain the plug for reinstallation if the Scrape Maxx accessory is later removed.
8. **If the harness connector is triangular,** plug the connector directly onto the pressure switch installed in Step 5.

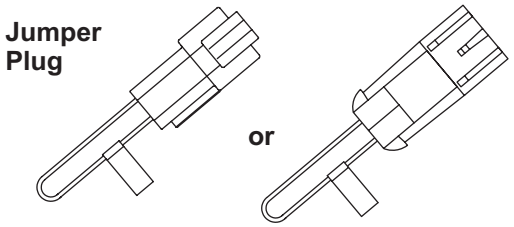

If the harness connector is oval shaped, install the supplied switch adapter between the harness connector and the pressure switch.

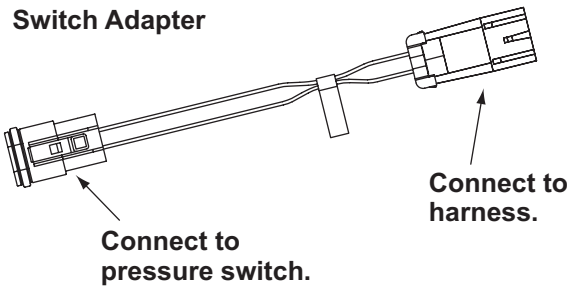

9. Turn the cab control ON. Raise and lower the blade several times to purge the lift ram.
10. Activate the Scrape Maxx down force mode according to the Operating Instructions that follow. The hydraulic unit will run momentarily to pressurize the lift ram and then turn OFF.

⚠ WARNING

Hydraulic fluid under pressure can cause skin injection injury. If you are injured by hydraulic fluid, get medical attention immediately

11. Inspect all hydraulic connections for leaks. If you suspect a hose leak, DO NOT use your hand to locate it. Use a piece of cardboard or wood. Replace the hydraulic unit cover.
12. Apply the Scrape Maxx label to the headgear below the SECURITY GUARD™ label on the driver's side.

UNINSTALLING THE Scrape Maxx ACCESSORY

If the Scrape Maxx pressure switch is removed from the snowplow, reinstall the retained O-ring boss plug and jumper plug removed in Steps 4 and 7 of the Installation Instructions.

OPERATING INSTRUCTIONS

Do not enable the Scrape Maxx mode until the pressure switch has been installed.

Enable or Disable Scrape Maxx Mode

1. Turn the vehicle ignition key to the ON position.
2. With the control OFF, press and hold the #4 button (hand-held control) or hold the lever in the #4 position (joystick control).
3. While still holding the #4 button or joystick lever, turn the control ON. The red POWER indicator light will turn ON.
4. Continue holding the #4 button or joystick lever until the green FLOAT light flashes twice.
5. Release the #4 button or joystick lever. The Scrape Maxx mode is now enabled/disabled.

Once enabled, the Scrape Maxx mode will be available whenever the control is ON.

To activate the Scrape Maxx mode while plowing, press and hold the LOWER button (hand-held control) or hold the lever in the "LOWER" position (joystick control) until the green FLOAT light flashes.

OVERVIEW

The hydraulic and electrical schematics in this section explain how the hydraulic unit performs the different functions. A schematic is an abstract drawing showing the purpose of each of the components in the system. Each component is represented by a graphical symbol. The hydraulic and electrical legends describe each of the symbols used in the schematics for this guide.

The first two schematics show a general overview of the complete hydraulic and electrical systems. Other schematics highlight the flow of hydraulic fluid and electrical current for each function the hydraulic unit performs, as well as the flow of electrical current for snowplow and vehicle lights.

- Bold lines represent the circuit being activated.
- Shaded components are either activated or shifted from their normal position.

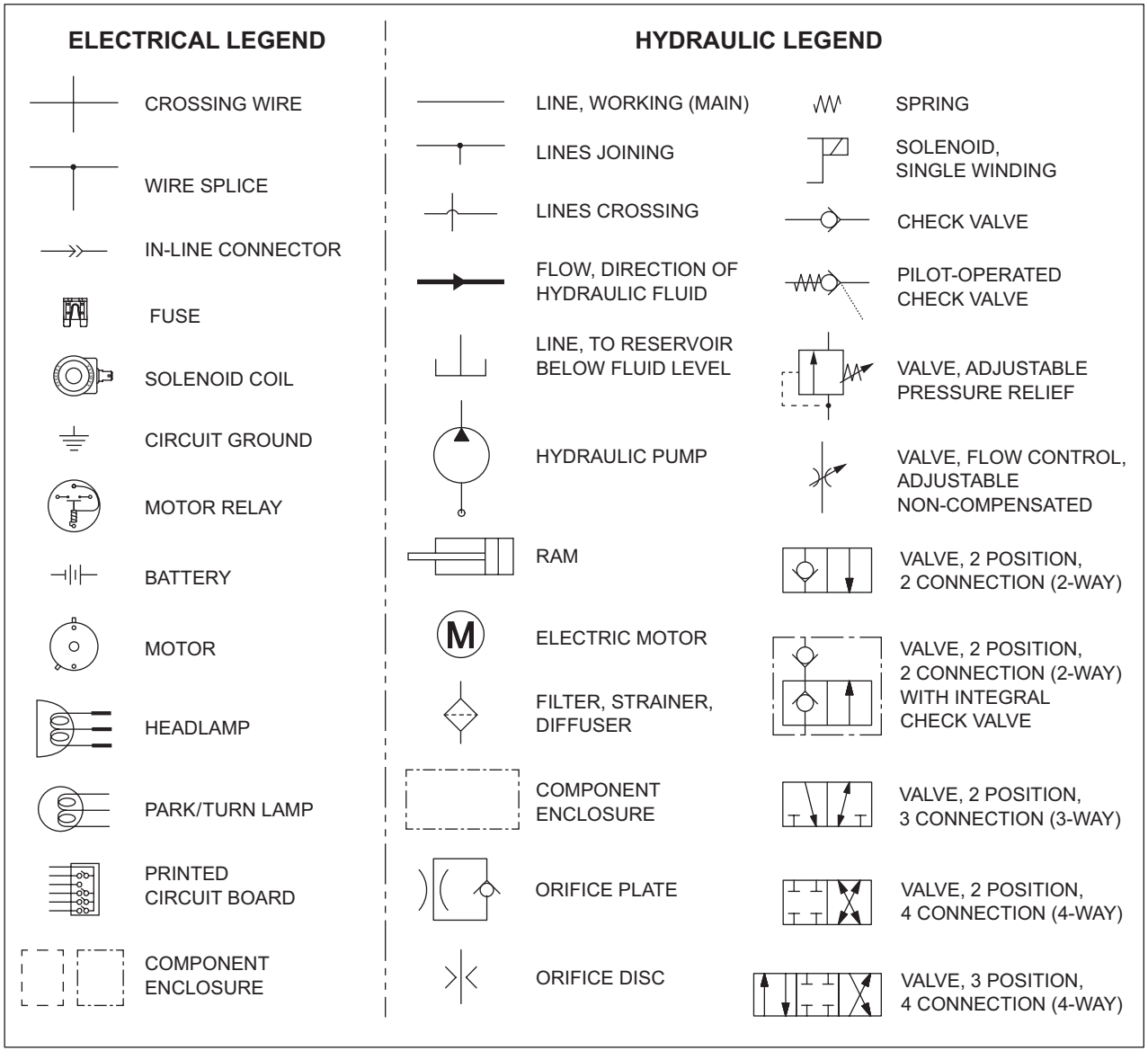

PLOW SIDE			VEHICLE SIDE		
FLOAT Ground					FLOAT Input
EdgeView™SENSE IN	YEL	1	1	YEL	EdgeView LIGHT
COMMON	BLK/ORN	2	2	BLK/ORN	COMMON
RIGHT LOW	BLK/WHT	3	3	BLK/WHT	RIGHT LOW
RIGHT HIGH	WHT/YEL	4	4	WHT/YEL	RIGHT HIGH
LEFT HIGH	WHT	5	5	WHT	LEFT HIGH
BEL OUT	YEL	6	6	YEL	EdgeView LIGHT
COM	BLK/ORN	7	7	BLK/ORN	COMMON
LEFT LOW	BLK	8	8	BLK	LEFT LOW
LEFT TURN	GRY	9	9	GRY	LEFT TURN
RIGHT TURN	PUR	10	10	PUR	RIGHT TURN
RIGHT PARK	BRN	11	11	BRN	RIGHT PARK
RIGHT DRL	PNK	12	12	PNK	RIGHT DRL
COMMON	BLK/ORN	13	13	BLK/ORN	COMMON
COMMON	BLK/ORN	14	14	BLK/ORN	COMMON
LEFT PARK	BRN	15	15	LTBLU	LEFT PARK
LEFT DRL	PNK	16	16	PNK	LEFT DRL

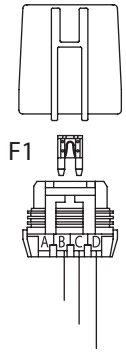

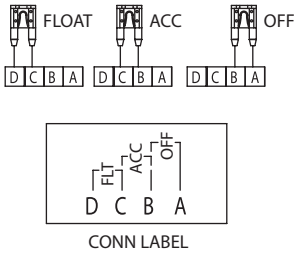

Vehicle Side

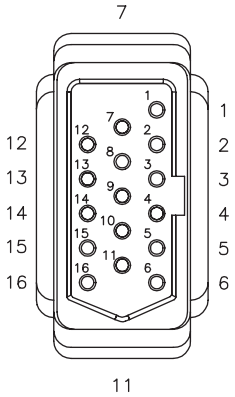

Plow Side

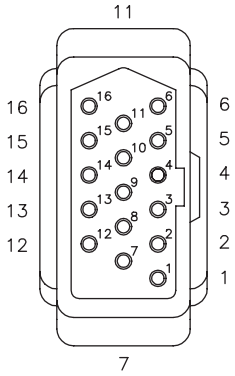

38800 (H9/H11)

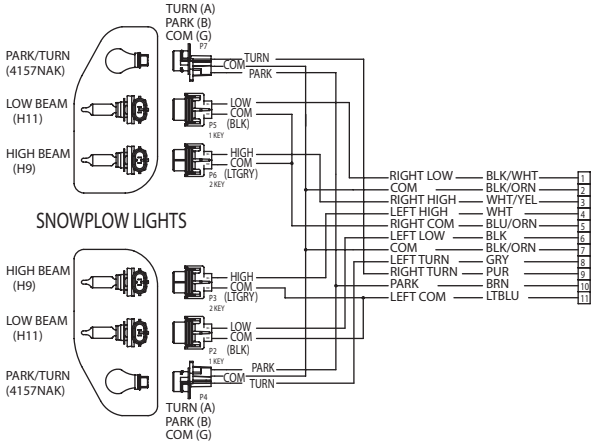

28800-1 (H13)

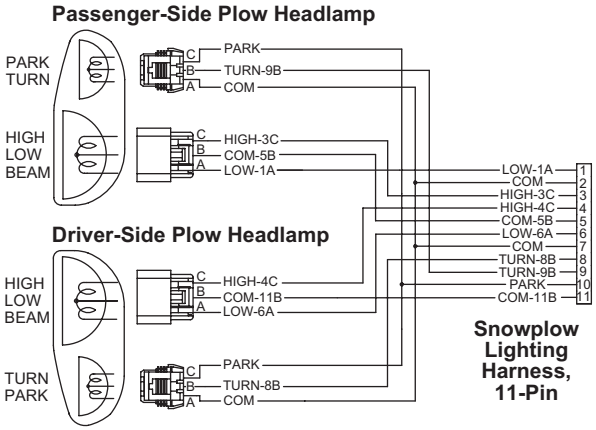

TYPICAL LED PLOW LIGHT, HEADLAMP CONTROL MODULE (HCM), AND HARNESS DIAGRAM

NOTE: On 2-plug electrical systems, plug covers shall be used whenever snowplow is disconnected.

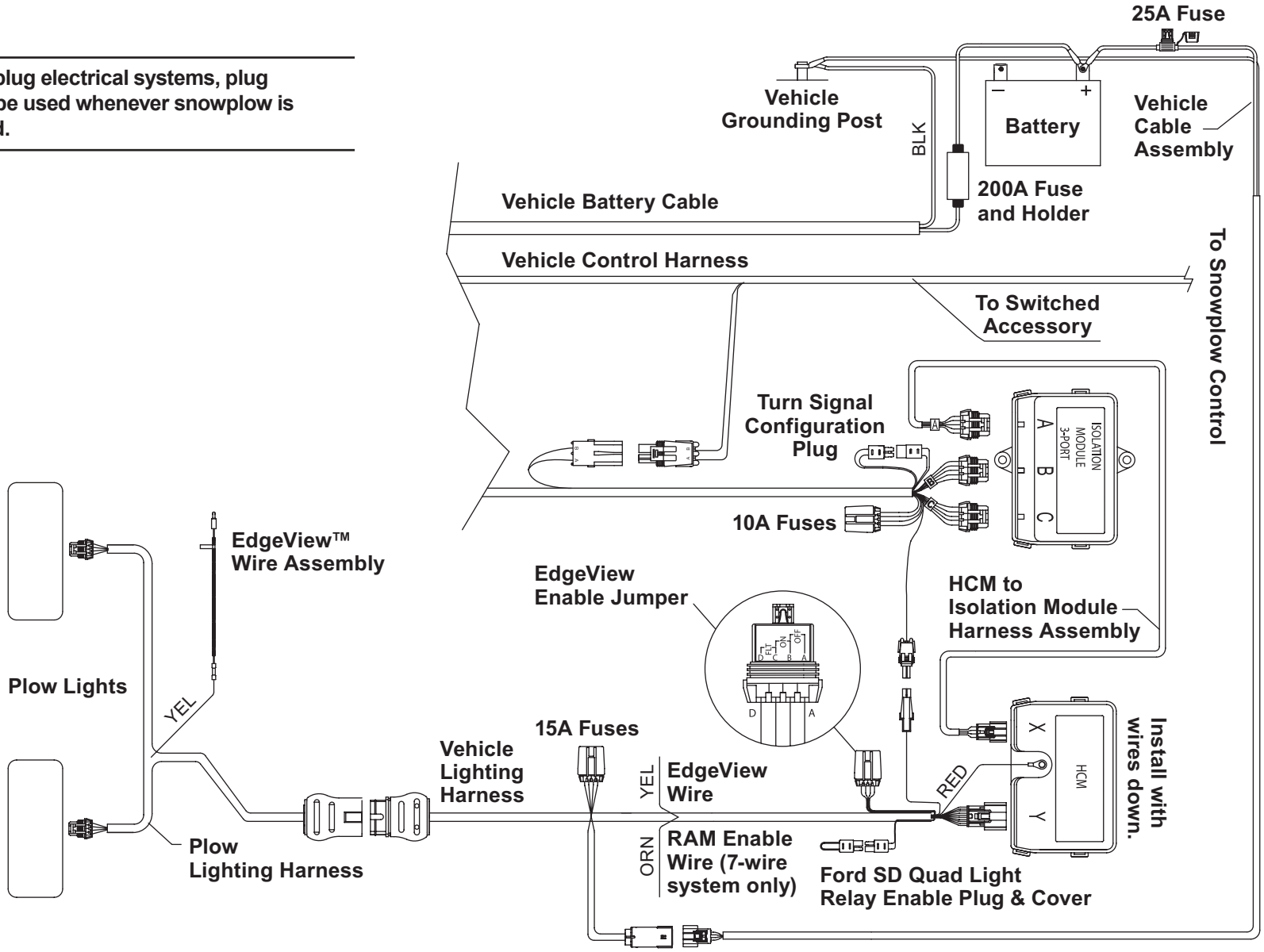

HEADLAMPS: TYPICAL LED SCHEMATIC *(continued on following page)*

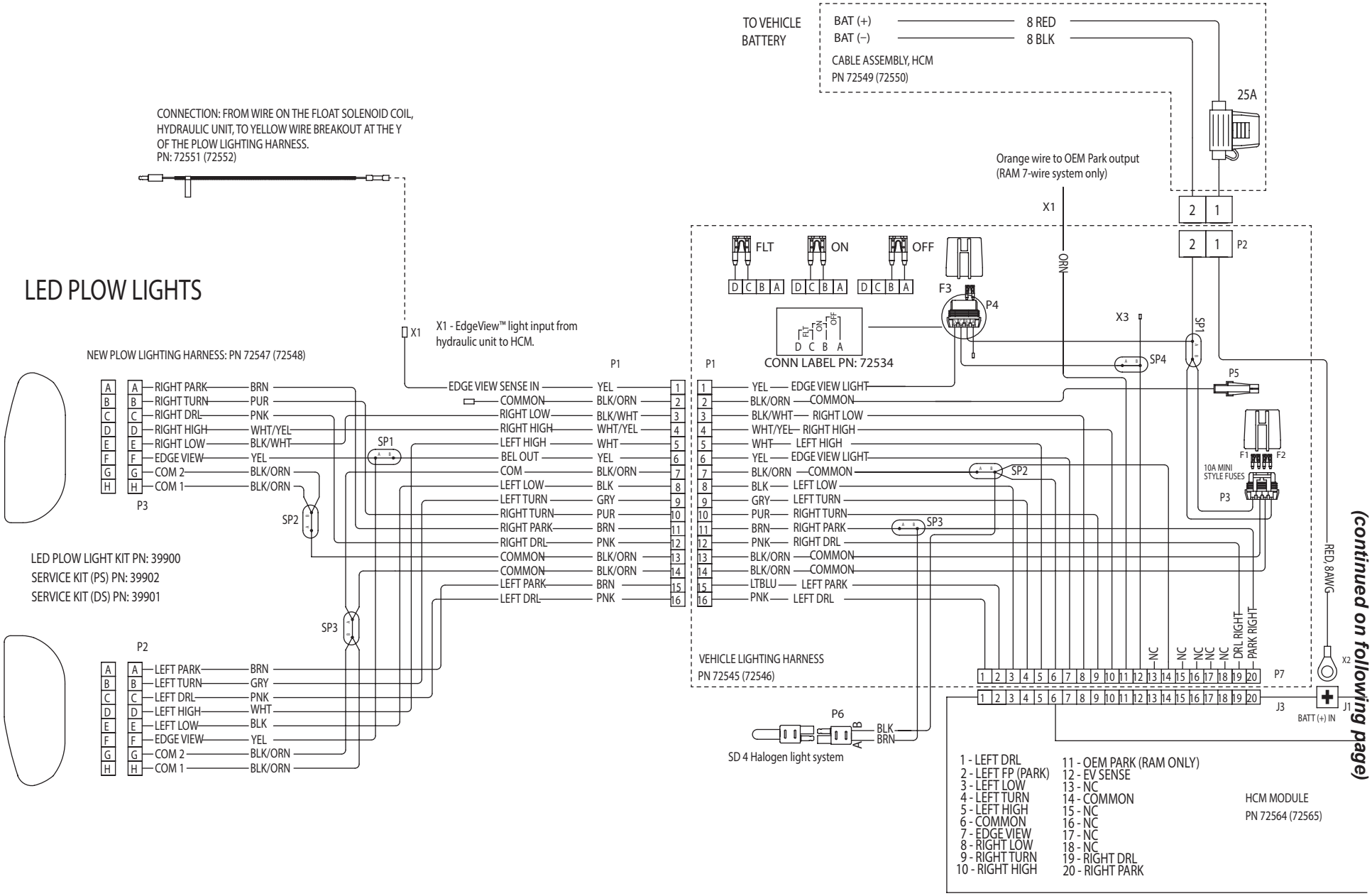

(continued on following page)

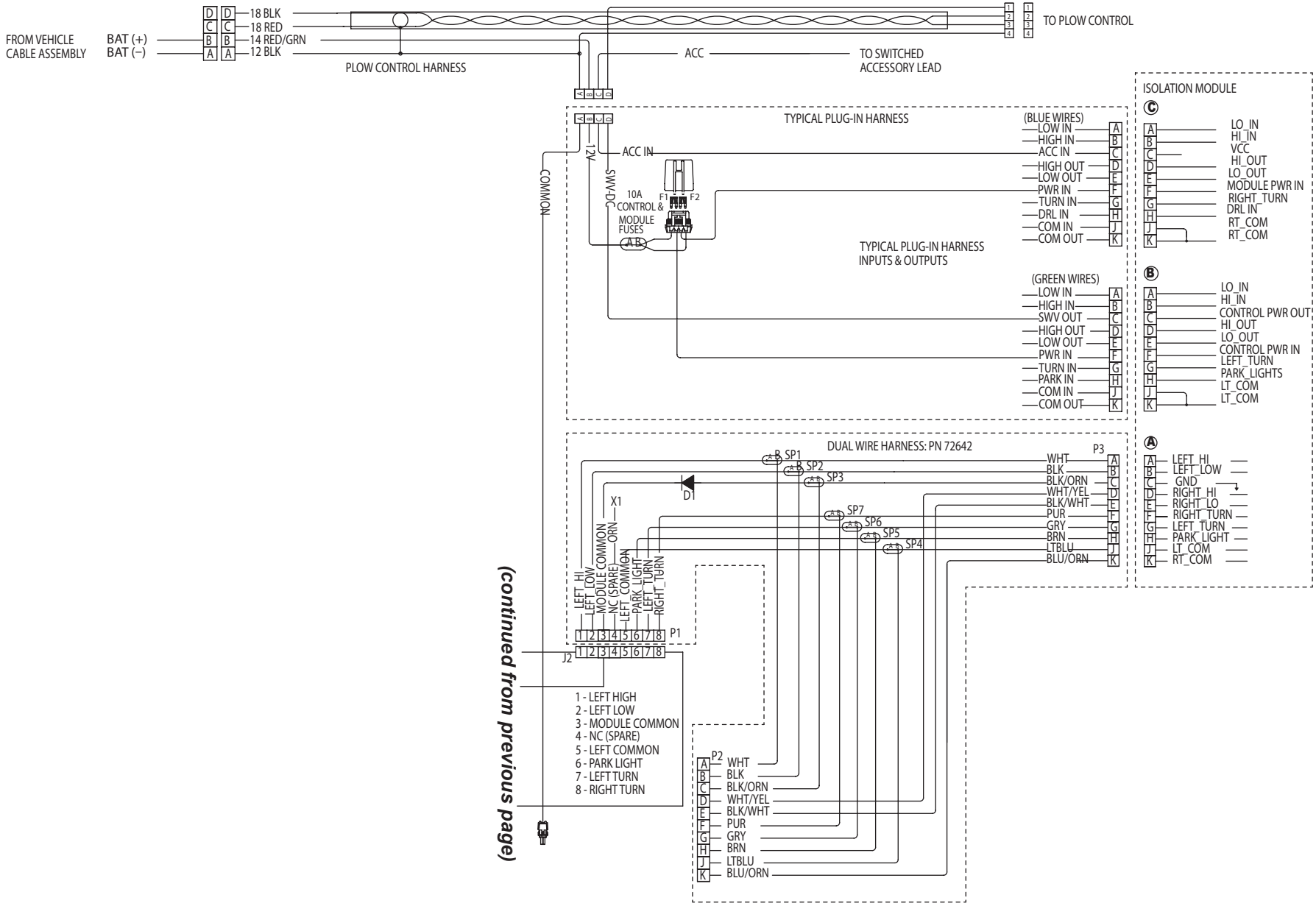
FROM VEHICLE CABLE ASSEMBLY
BAT (+)
BAT (–)
18 BLK
18 RED
14 RED/GRN
12 BLK
PLOW CONTROL HARNESS
TO PLOW CONTROL
ACC
TO SWITCHED ACCESSORY LEAD
ISOLATION MODULE
TYPICAL PLUG-IN HARNESS
(BLUE WIRES)
LOW IN
HIGH IN
ACC IN
HIGH OUT
LOW OUT
PWR IN
TURN IN
DRL IN
COM IN
COM OUT
ACC IN
12V
SWV-DC
COMMON
10A
CONTROL & MODULE FUSES
F1
F2
TYPICAL PLUG-IN HARNESS INPUTS & OUTPUTS
(GREEN WIRES)
LOW IN
HIGH IN
SWV OUT
HIGH OUT
LOW OUT
PWR IN
TURN IN
PARK IN
COM IN
COM OUT
LO_IN
HI_IN
VCC
HI_OUT
LO_OUT
MODULE PWR IN
RIGHT_TURN
DRL IN
RT_COM
RT_COM
LO_IN
HI_IN
CONTROL PWR OUT
HI_OUT
LO_OUT
CONTROL PWR IN
LEFT_TURN
PARK_LIGHTS
LT_COM
LT_COM
LEFT_HI
LEFT_LOW
GND
RIGHT_HI
RIGHT_LO
RIGHT_TURN
LEFT_TURN
PARK_LIGHT
LT_COM
RT_COM
DUAL WIRE HARNESS: PN 72642
P3
WHT
BLK
BLK/ORN
WHT/YEL
BLK/WHT
PUR
GRY
BRN
LTBLU
BLU/ORN
SP1
SP2
SP3
SP4
SP5
SP6
SP7
D1
X1
LEFT_HI
LEFT_LOW
MODULE COMMON
NC (SPARE)
LEFT_COMMON
PARK_LIGHT
LEFT_TURN
RIGHT_TURN
P1
J2
1 - LEFT HIGH
2 - LEFT LOW
3 - MODULE COMMON
4 - NC (SPARE)
5 - LEFT COMMON
6 - PARK LIGHT
7 - LEFT TURN
8 - RIGHT TURN
P2
WHT
BLK
BLK/ORN
WHT/YEL
BLK/WHT
PUR
GRY
BRN
LTBLU
BLU/ORN
(continued from previous page)

HEADLAMPS: TYPICAL DUAL-WIRE HALOGEN/LED SCHEMATIC *(continued on following page)*

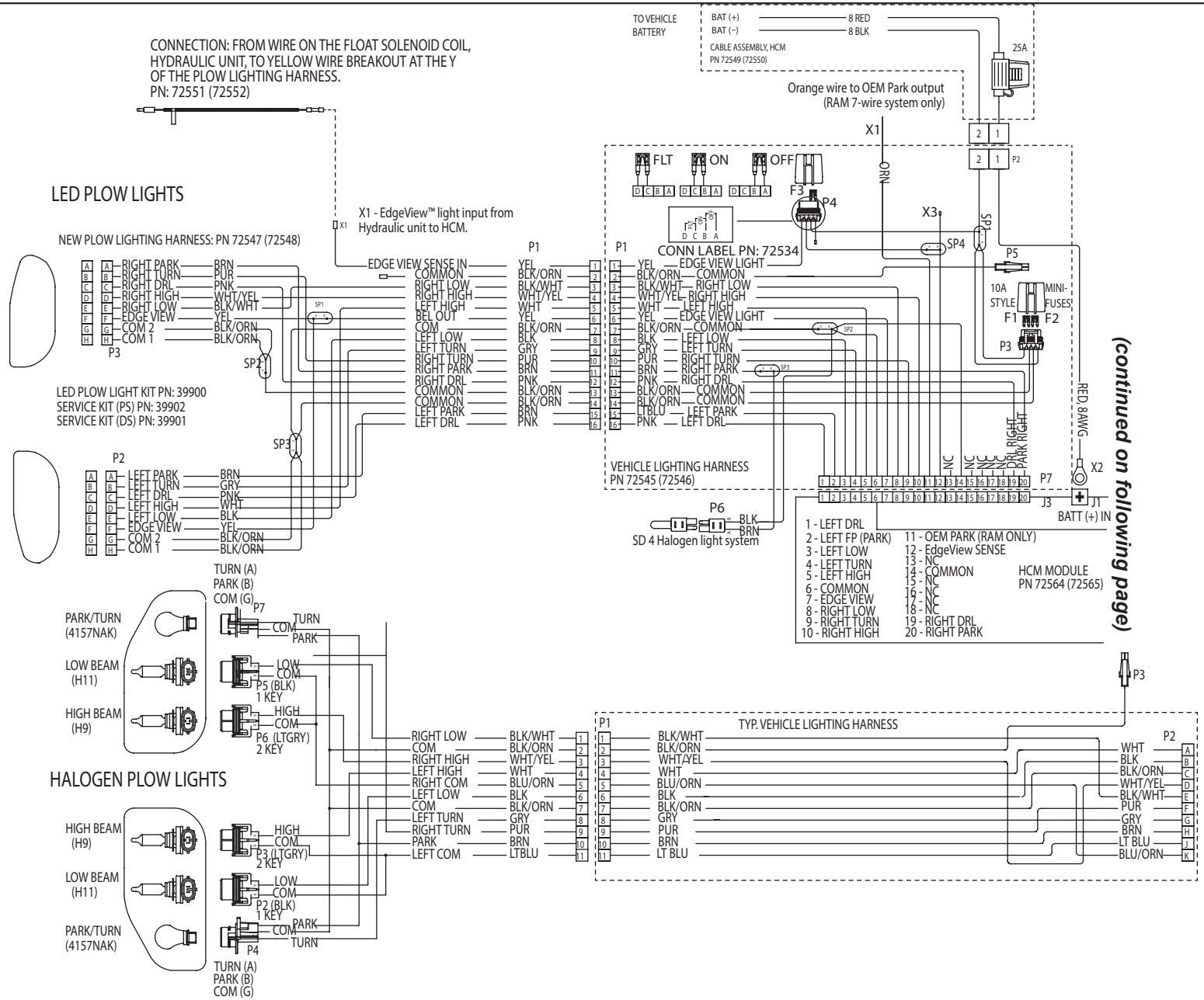

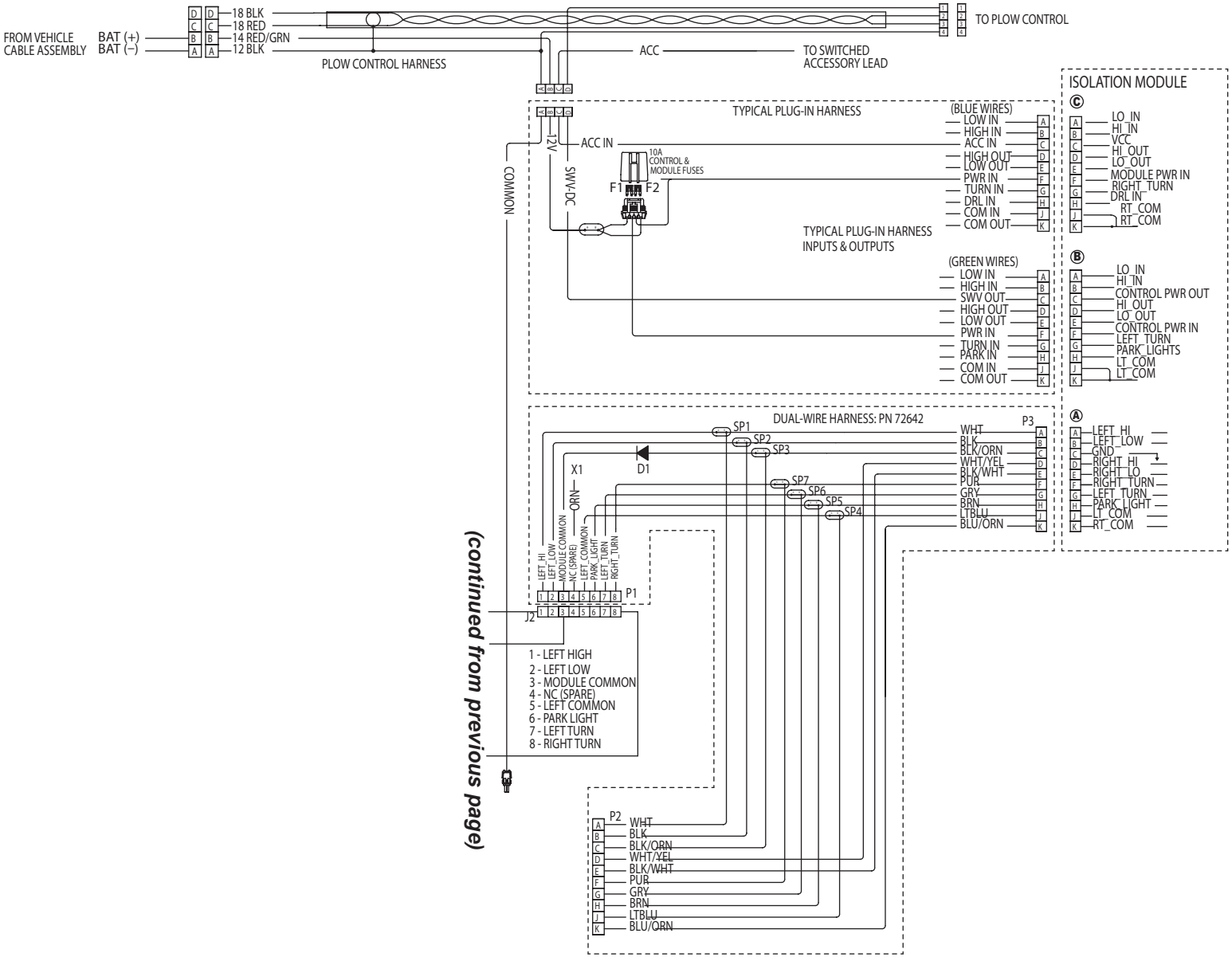

(continued from previous page)

HEADLAMPS: DUAL-WIRE HALOGEN/LED INSTALLATION

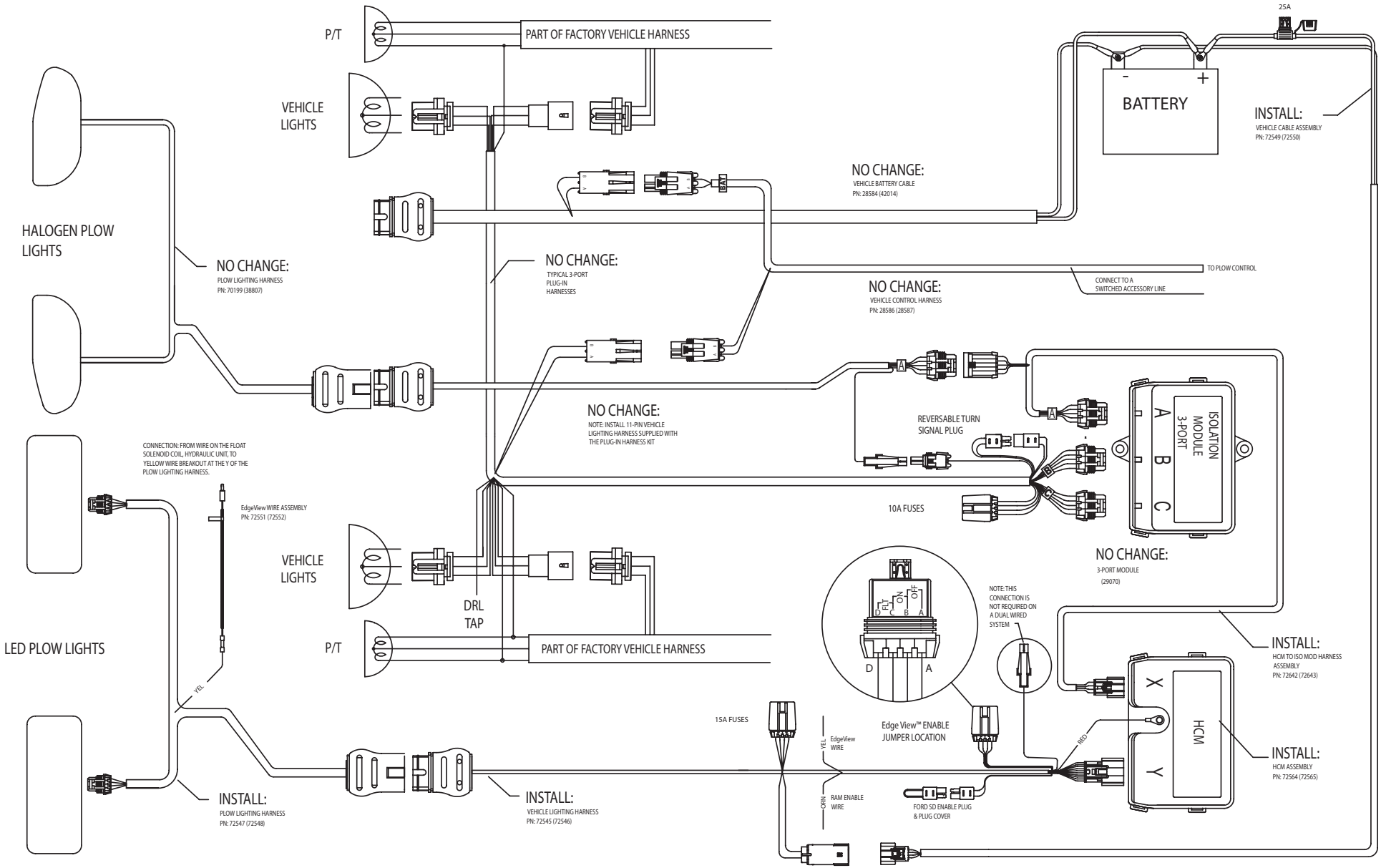

EdgeView™ BLADE-EDGE ILLUMINATION SYSTEM – LED LIGHTING APPLICATIONS

Changing the Blade-Edge Illumination Mode

On snowplows equipped with LED headlamps, the EdgeView technology feature offers three modes for blade-edge illumination. The factory default setting is ON.

To change the blade-edge illumination mode, remove the cover from the fuse holder located near the "Y" port of the headlamp control module installed in the vehicle engine compartment.

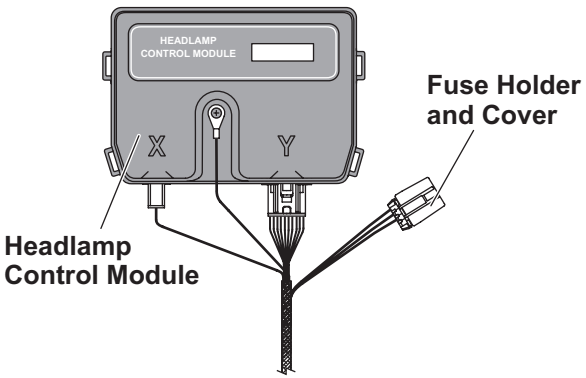

Remove the jumper fuse from the fuse holder and re-insert it in the desired mode position as shown below. Replace the fuse holder cover.

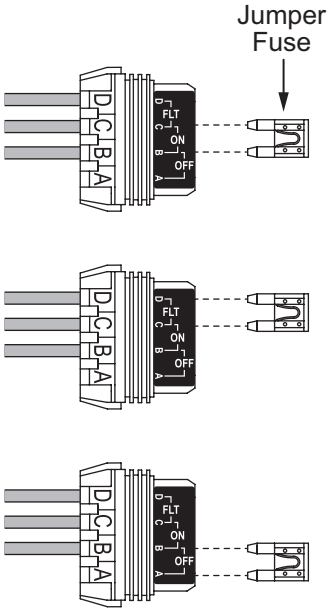

Default – ON: Blade edge lights illuminate when plow has power.

FLT: Blade edge lights illuminate when blade is in FLOAT mode.

OFF: Blade edge lights disabled.

EdgeView Lighting Connections

The EdgeView Float (FLT) mode activation function will require a second plow-side electrical connection.

1. On the plow-side LED lighting harness, locate the yellow wire cable tied to the body of the harness near the "Y" section.
2. Strip the end of the yellow wire and insert stripped wire end into the pre-installed insulated butt connector on the supplied EdgeView wire assembly.
3. Crimp the connection and heat seal the insulated splice.
4. Remove the plow hydraulic unit cover. Route the EdgeView wire assembly along the plow structure to the plow hydraulic unit, and cable tie wires as needed.
5. Locate the solenoid on the plow hydraulic unit that is activated during the plow Lower/Float function.
6. Plug the bullet terminal on the end of the supplied EdgeView wire assembly into the receptacle on the corresponding solenoid wire. If a receptacle is not found on the correct solenoid wire, remove the bullet terminal from the EdgeView wire assembly and splice the end of the EdgeView wire into the correct solenoid wire.
7. Cable tie extra wire length to the snowplow assembly and reinstall the hydraulic unit covers.

NOTE: EdgeView light will turn ON or OFF approximately 5 seconds after EdgeView mode is activated or canceled.

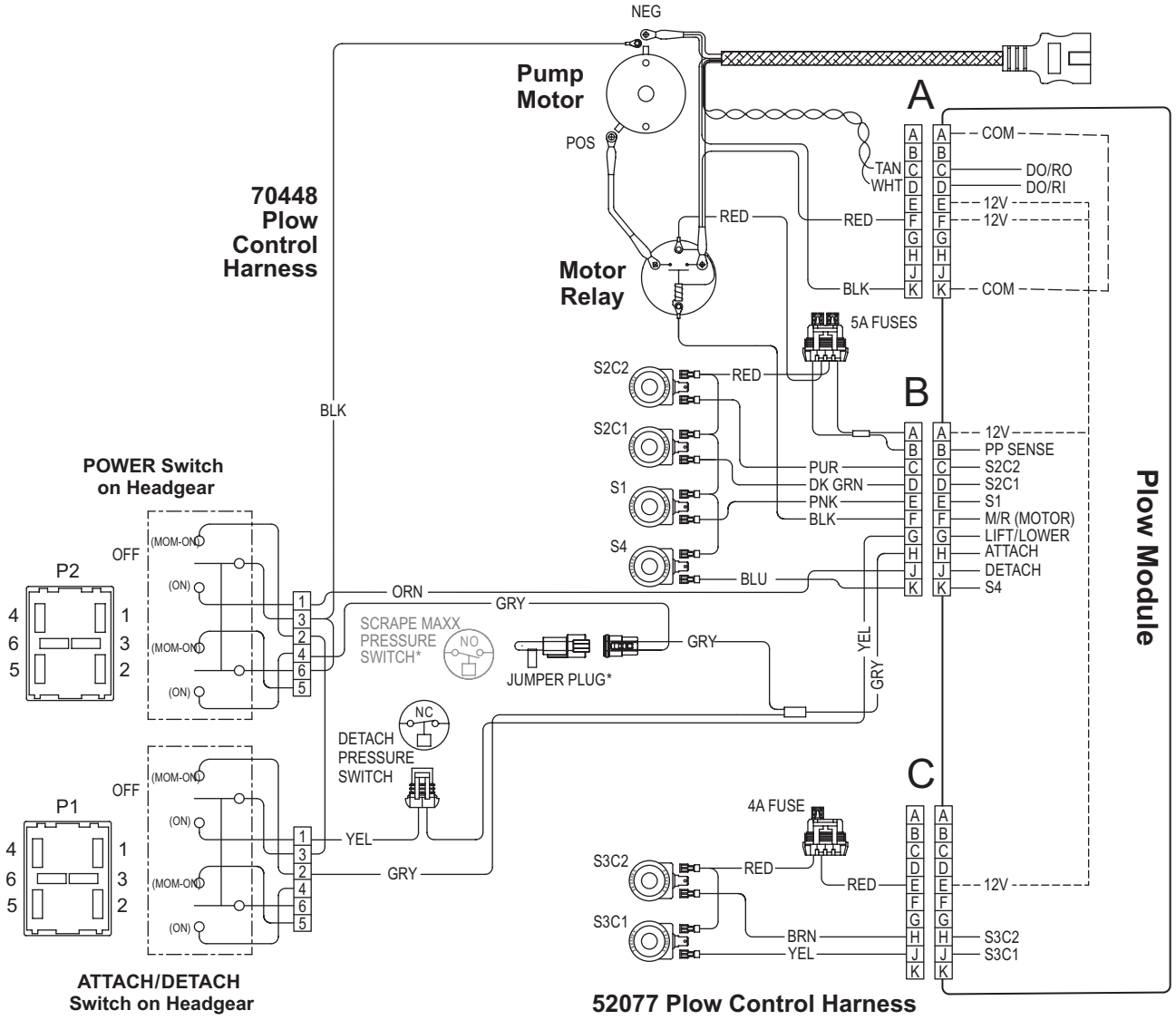

*Jumper plug is replaced by pressure switch when Scrape Maxx™ accessory is installed.

HYDRAULIC SYSTEM SCHEMATIC – STRAIGHT BLADE SNOWPLOWS

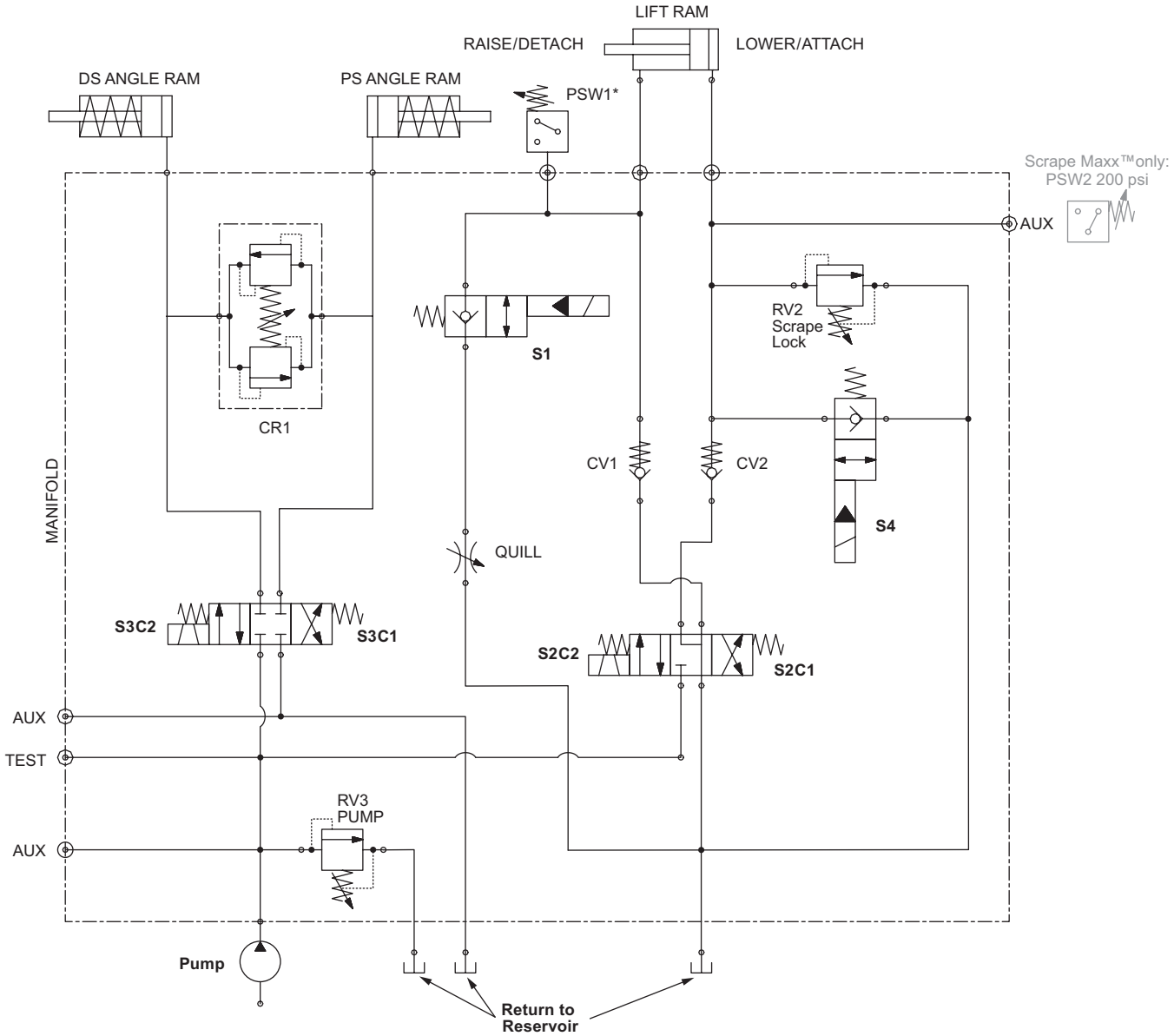

*Detach Pressure Switch: 550 psi switch installed on LT and RD plows; 725 psi switch on HD plow.

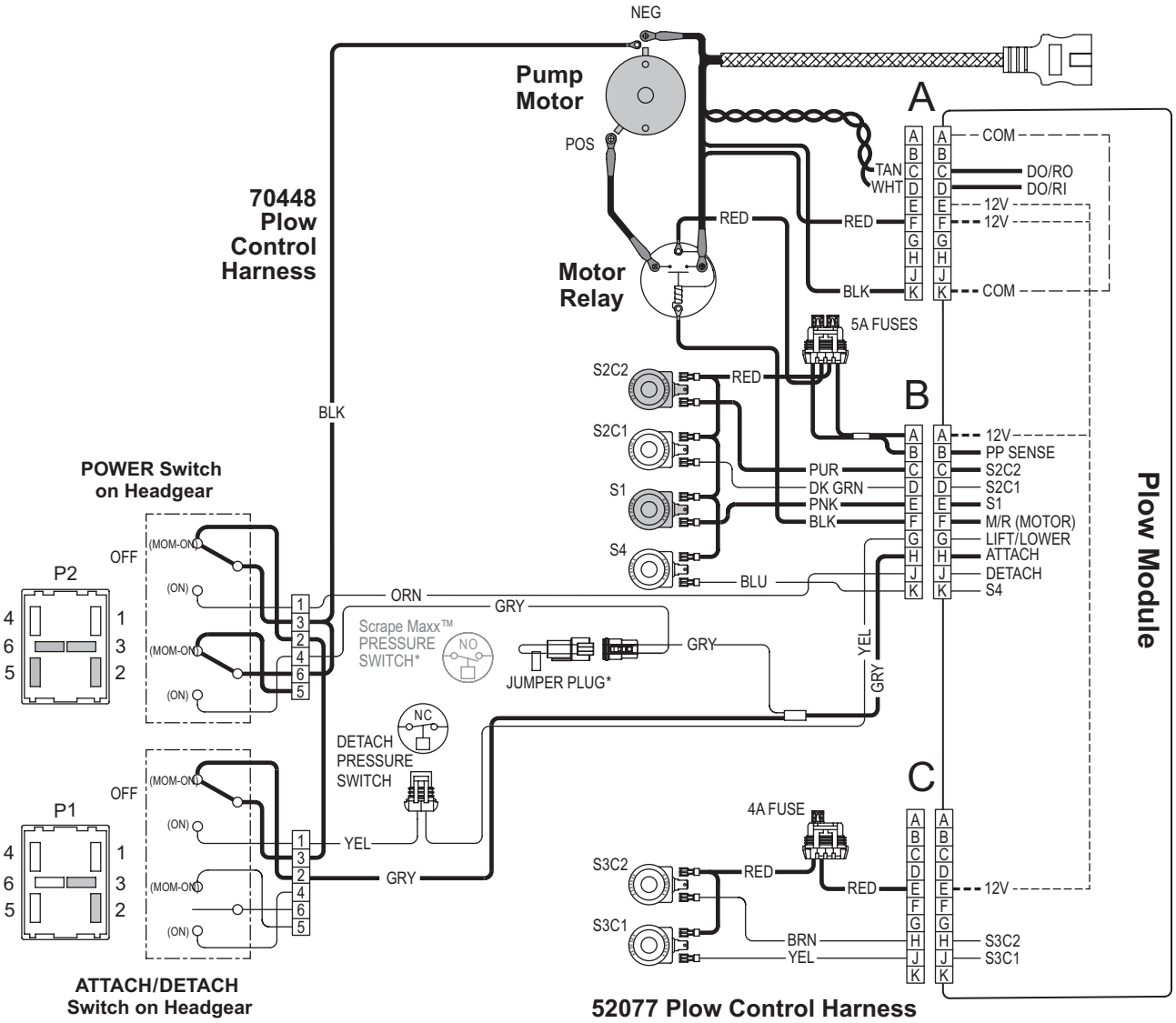

*Jumper plug is replaced by pressure switch when Scrape Maxx™ accessory is installed.

System Response

⚠ CAUTION

On units with the Scrape Maxx™ down force accessory installed and enabled, the hydraulic pump will cycle ON and OFF automatically when the vehicle ignition is ON and the blade is in LOWER/FLOAT mode.

⚠ CAUTION

Battery voltage is supplied to the plow module, motor relay, and solenoid coils when the snowplow is connected to the vehicle.

1. Read the complete Automatixx® system attach procedure instructions in the Owner's Manual or on the instruction label on the back of the blade, driver's side.
2. Cab control must be connected and turned OFF.
3. Move the POWER switch (upper switch on headgear) to the "OFF" (center) position. Plug in the electrical harness.
4. Hold the POWER switch in the "ATTACH/DETACH OPERATION" (right) position. This will send ground to the ATTACH /DETACH switch.

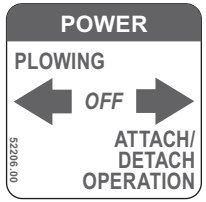

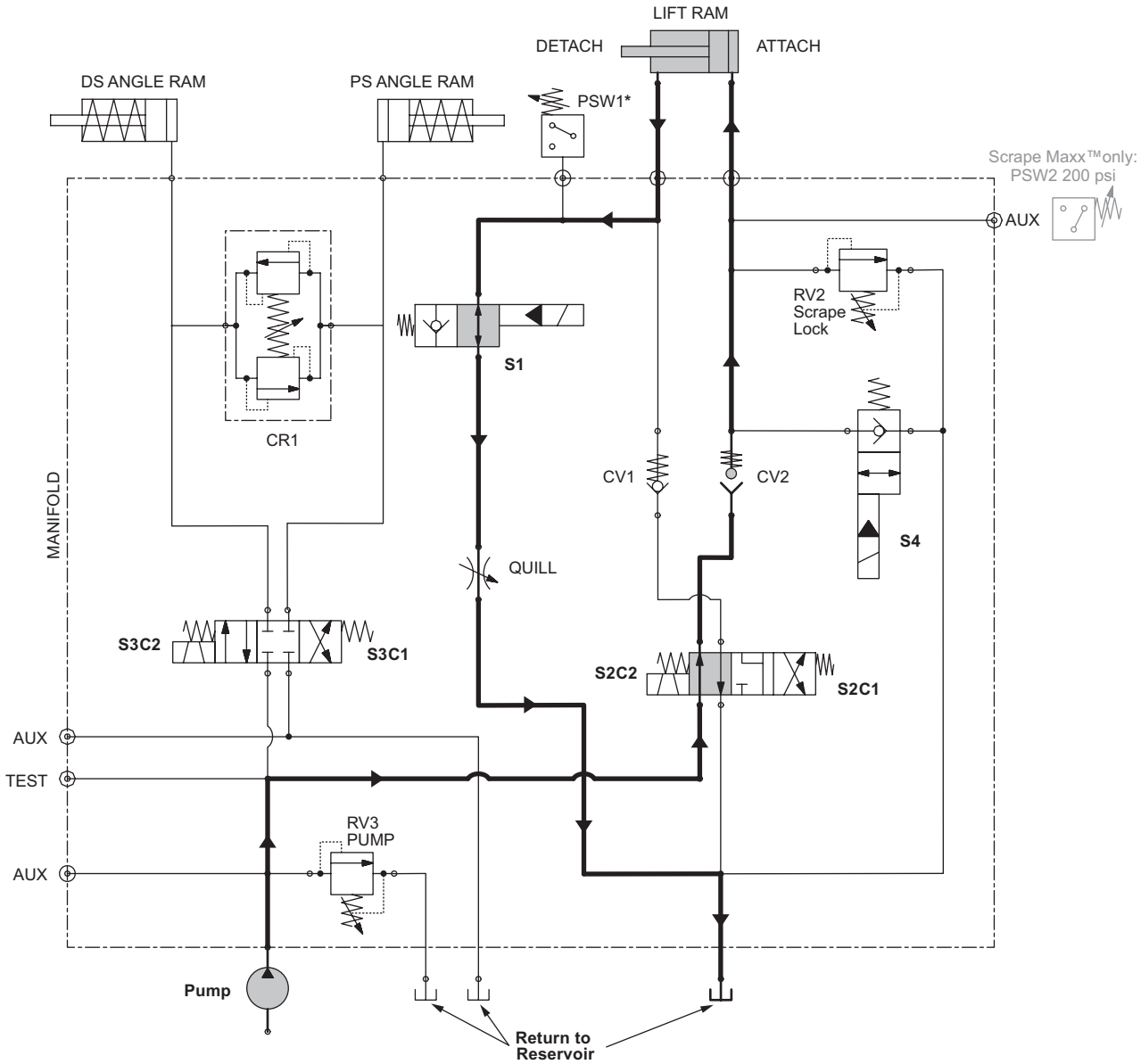

* Detach Pressure Switch: 550 psi switch installed on LT and RD plows; 725 psi switch on HD plow.

5. Hold the ATTACH/DETACH switch (lower switch on headgear) in the "ATTACH" (right) position. This will send ground through the gray wire to port B of the plow module. The module will complete the ground path to the motor relay and solenoid cartridge valves S2C2 and S1.

6. Hydraulic fluid from the pump flows through the activated S2C2 cartridge valve, through CV2, and into the base end of the lift cylinder, causing the ram to extend.
7. The extending lift ram pushes hydraulic fluid out of the rod end of the cylinder, through the activated S1 cartridge valve, through the quill, and back into the reservoir. This action rotates the headgear up into the mounting position.
8. To complete attachment of the snowplow, follow the instructions in the Owner's Manual or on the back-of-blade instruction label.

Solenoid		ATTACH PLOW	DETACH PLOW
Motor	M	ON	ON
SV08-2211	S1	ON	
SV08-47D	S2C1		ON
	S2C2	ON	
SV08-47C	S3C1		
	S3C2		
SV08-2211	S4		ON

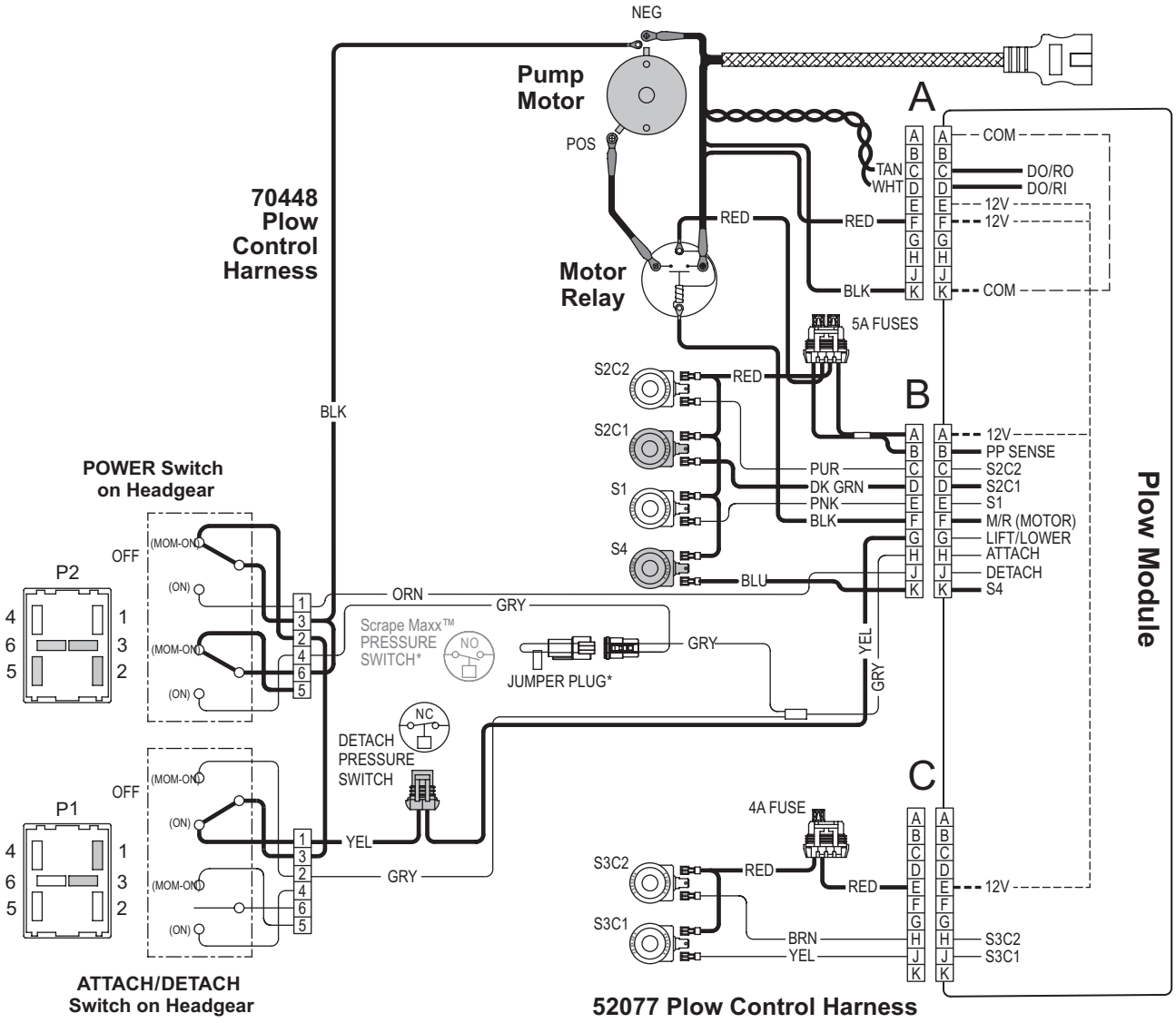

*Jumper plug is replaced by pressure switch when Scrape Maxx™ accessory is installed.

System Response

⚠ CAUTION

On units with the Scrape Maxx™ down force accessory installed and enabled, the hydraulic pump will cycle ON and OFF automatically when the vehicle ignition is ON and the blade is in LOWER/FLOAT mode.

⚠ CAUTION

Battery voltage is supplied to the plow module, motor relay, and solenoid coils when the snowplow is connected to the vehicle.

1. Read the complete Automatixx® system detach procedure instructions in the Owner's Manual or on the instruction label on the back of the blade, driver's side.
2. Cab control must be connected and turned OFF. Electrical harness must be connected.
3. Move the POWER switch (upper switch on headgear) to the "OFF" (center) position.
4. Hold the POWER switch in the "ATTACH/DETACH OPERATION" (right) position. This will send ground to the ATTACH /DETACH switch.

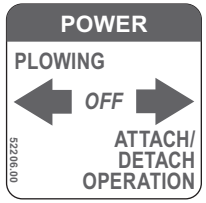

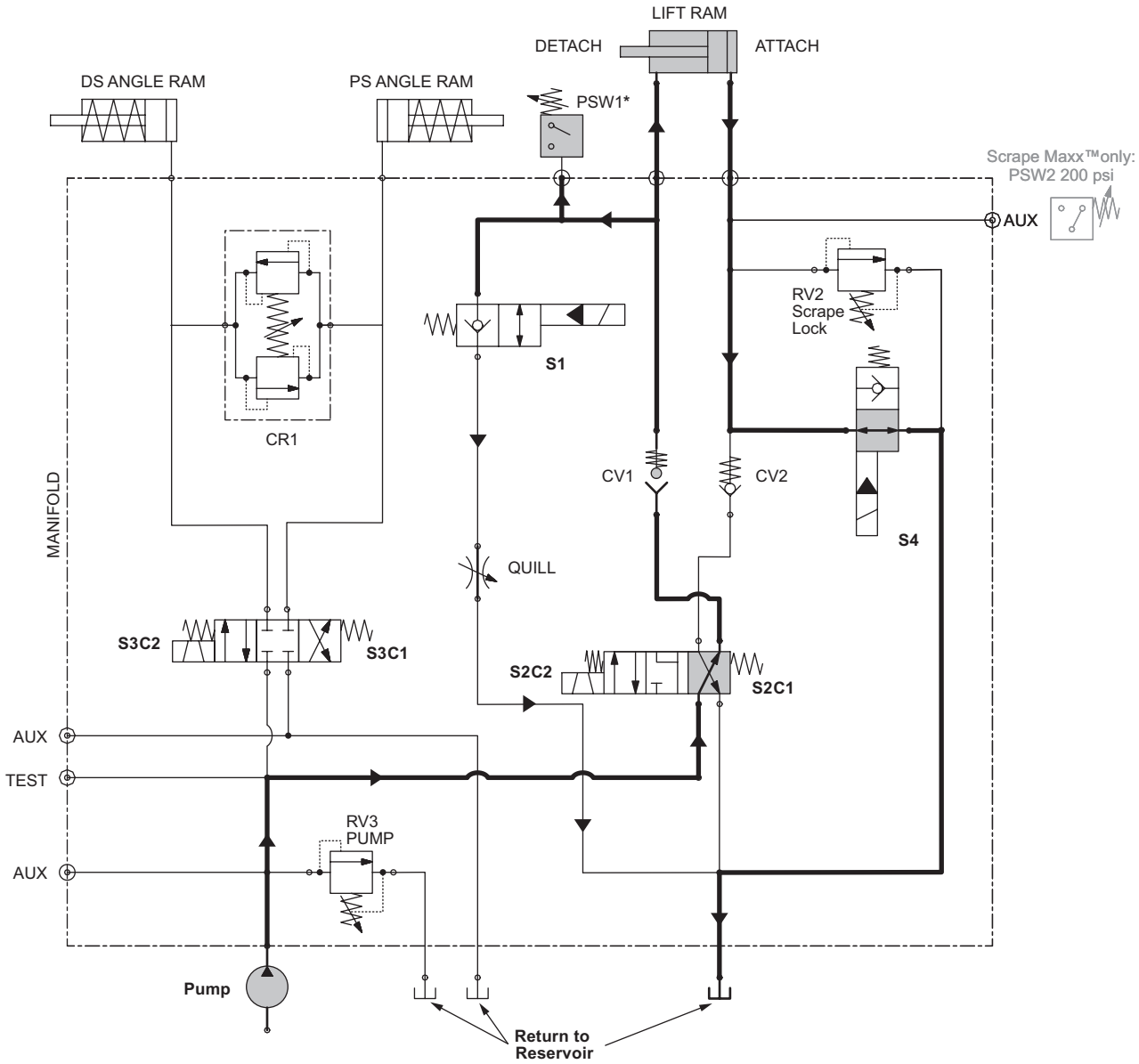

* Detach Pressure Switch: 550 psi switch installed on LT and RD plows; 725 psi switch on HD plow.

5. Hold the ATTACH/DETACH switch (lower switch on headgear) in the "DETACH" (left) position. This will send ground through the yellow wire to port B of the plow module. The module will complete the ground path to the motor relay and solenoid cartridge valves S2C1 and S4.
6. Hydraulic fluid from the pump flows through the activated S2C1 cartridge valve, through CV1, and into the rod end of the lift cylinder, causing the ram to retract.
7. The retracting lift ram pushes hydraulic fluid out of the base end of the cylinder, through the activated S4 cartridge valve, and back into the reservoir. This action moves the headgear forward, dropping the stand.
8. Once the stand contacts the ground and the hydraulic pressure at the rod end of the lift cylinder reaches 725 psi (HD snowplow) or 550 psi (LT and RD snowplows), pressure switch PSW1 will open the electrical circuit and turn the hydraulic unit OFF.

Solenoid		ATTACH PLOW	DETACH PLOW
Motor	M	ON	ON
SV08-2211	S1	ON	
SV08-47D	S2C1		ON
	S2C2	ON	
SV08-47C	S3C1		
	S3C2		
SV08-2211	S4		ON

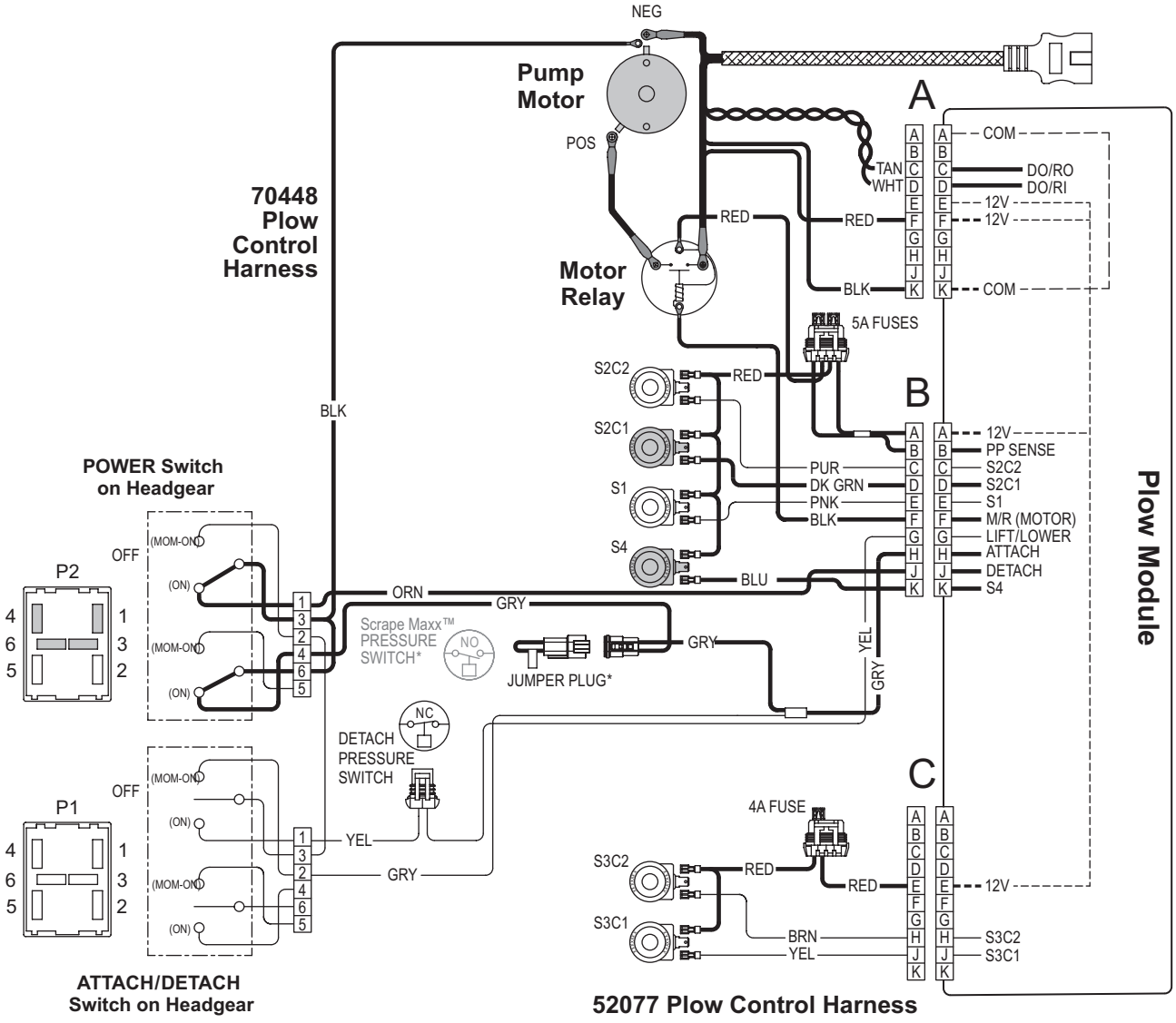

*Jumper plug is replaced by pressure switch when Scrape Maxx™ accessory is installed.

System Response

⚠ CAUTION

Battery voltage is supplied to the plow module, motor relay, and solenoid coils when the snowplow is connected to the vehicle.

1. Verify that the POWER switch (upper switch on headgear) is in the "PLOW" position.
2. When the RAISE function is activated on the cab control, the control sends a signal to plow module to complete the ground path for the electrical circuit, activating the motor relay and solenoid cartridge valves S2C1 and S4.
3. Hydraulic fluid from the pump flows through the activated S2C1, through CV1 and into the rod end of the lift cylinder, causing the ram to retract.

   At the same time, fluid is forced out of the base of the cylinder, through the activated S4, and returned to the reservoir.

Hold Blade in Raised Position

Hydraulic fluid is trapped in the rod end of the lift cylinder by the solenoid cartridge valve S1 and check valve CV1. (See schematic diagram inset on page 46.)

RAISE — HYDRAULIC

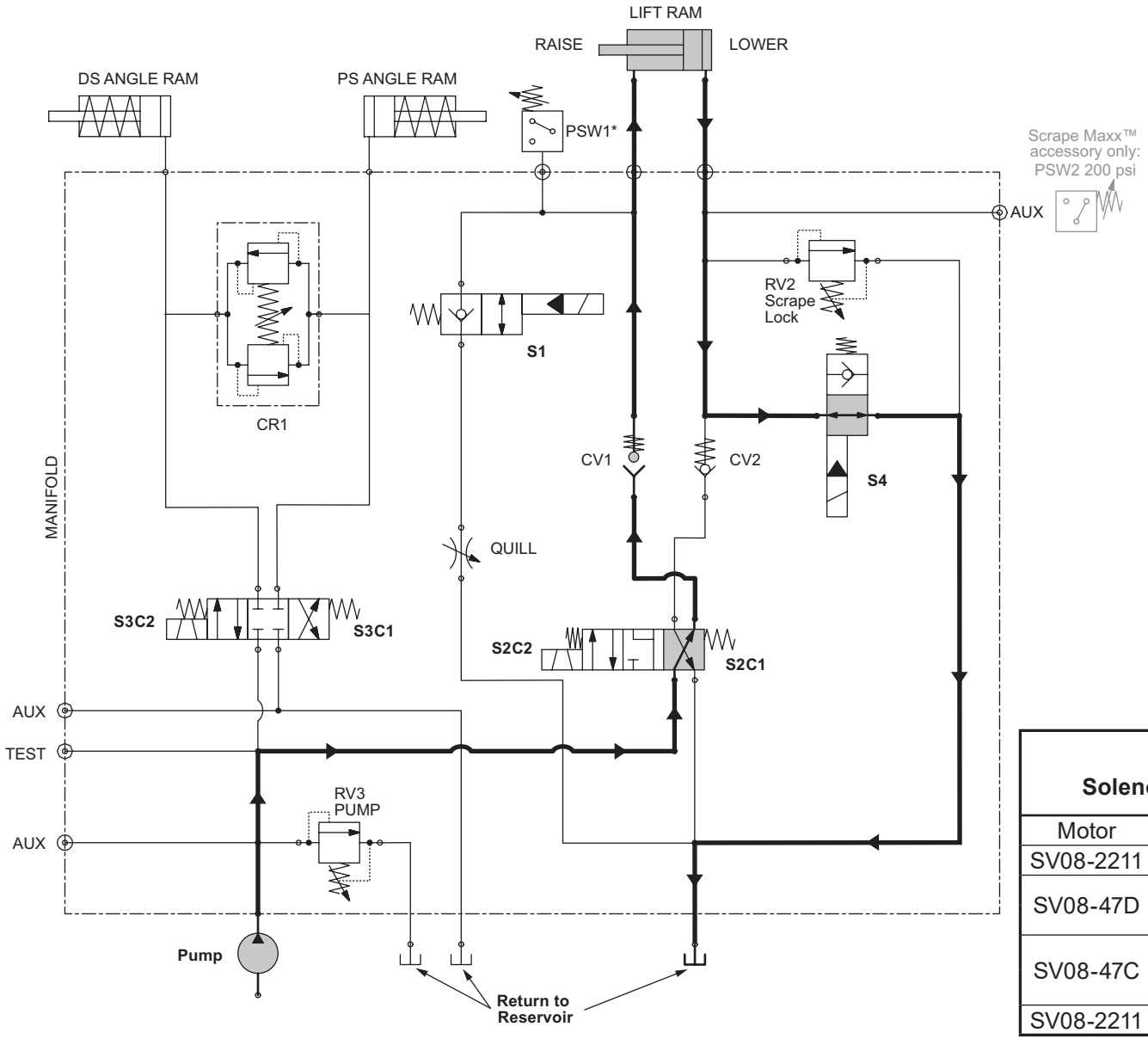

HOLD BLADE IN RAISED POSITION

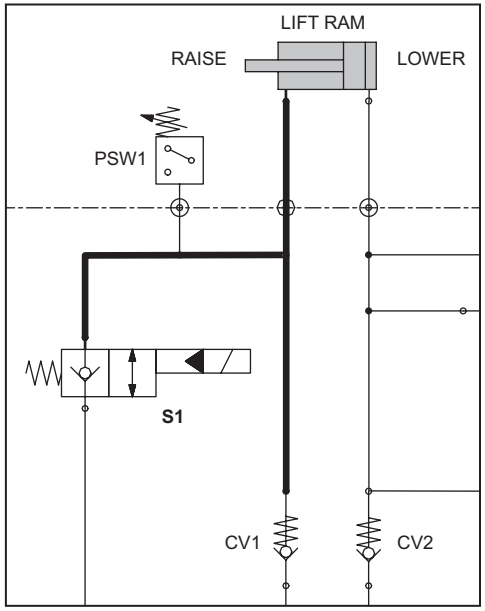

Solenoid		RAISE ↑	LOWER ↓	FLOAT	ANGLE RIGHT	ANGLE LEFT
Motor	M	ON			ON	ON
SV08-2211	S1		ON	ON		
SV08-47D	S2C1	ON				
	S2C2					
SV08-47C	S3C1					ON
	S3C2				ON	
SV08-2211	S4	ON	ON			

* 550 psi switch installed on LT and RD plows; 725 psi switch on HD plow.

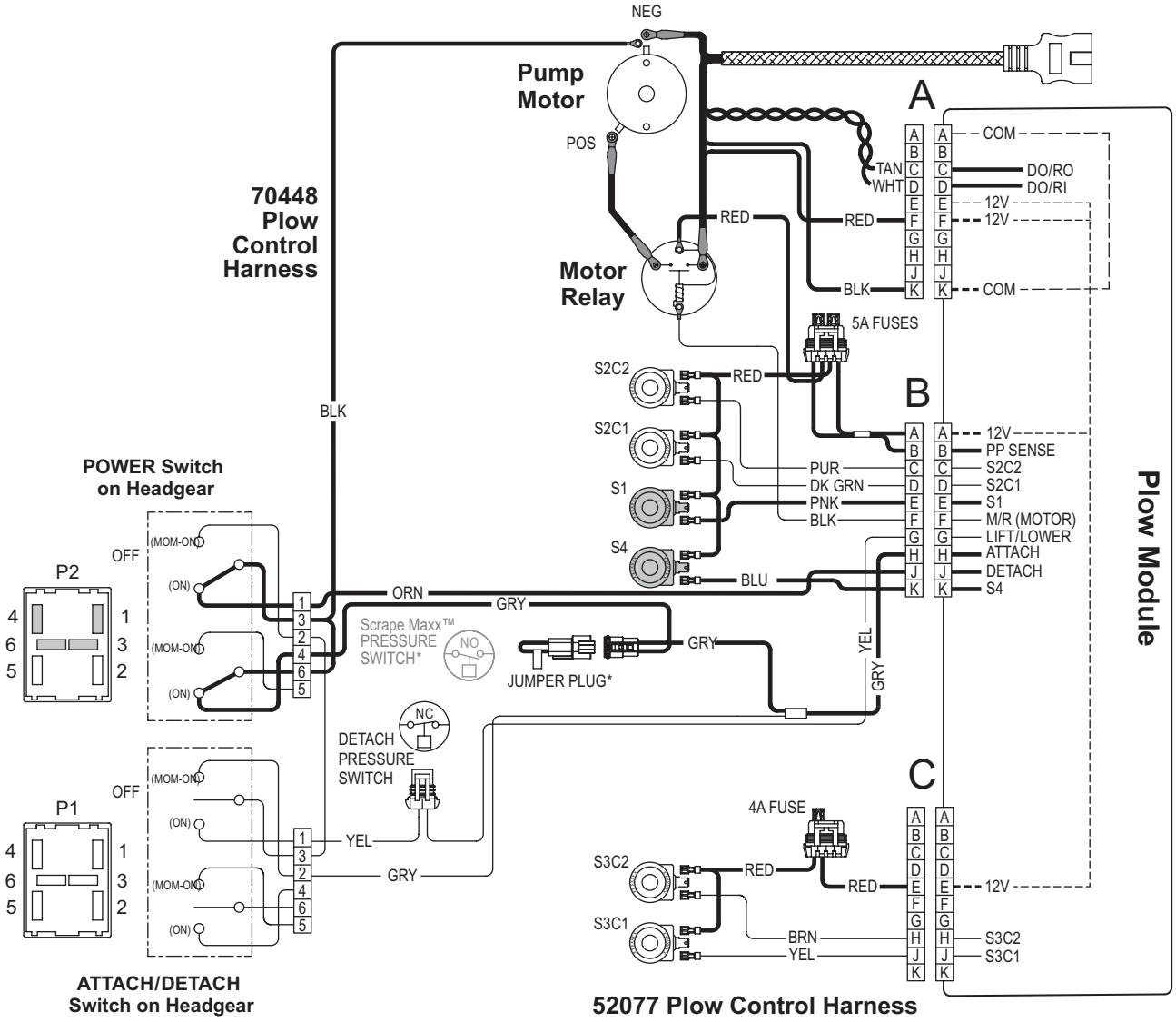

*Jumper plug is replaced by pressure switch when Scrape Maxx™ accessory is installed.

System Response

⚠ CAUTION

On units with the Scrape Maxx™ down force accessory installed and enabled, the hydraulic pump will cycle ON and OFF automatically when the vehicle ignition is ON and the blade is in LOWER/FLOAT mode.

⚠ CAUTION

Battery voltage is supplied to the plow module, motor relay, and solenoid coils when the snowplow is connected to the vehicle.

1. Verify that the POWER switch (upper switch on headgear) is in the "PLOW" position.
2. When the LOWER function is activated on the cab control, the control sends a signal to the plow module to complete the ground path for the electrical circuit, activating solenoid cartridge valves S1 and S4.
3. With the weight of the snowplow on the rod end of the lift ram and the S1 cartridge valve shifted, the lift ram extends. Hydraulic fluid is pushed out of the rod end of the cylinder, through the activated S1, through the quill, then returned to the reservoir.

   At the same time, fluid is drawn from the reservoir through the activated S4 and into the base of the cylinder. S4 will close after the LOWER function is released on the cab control.

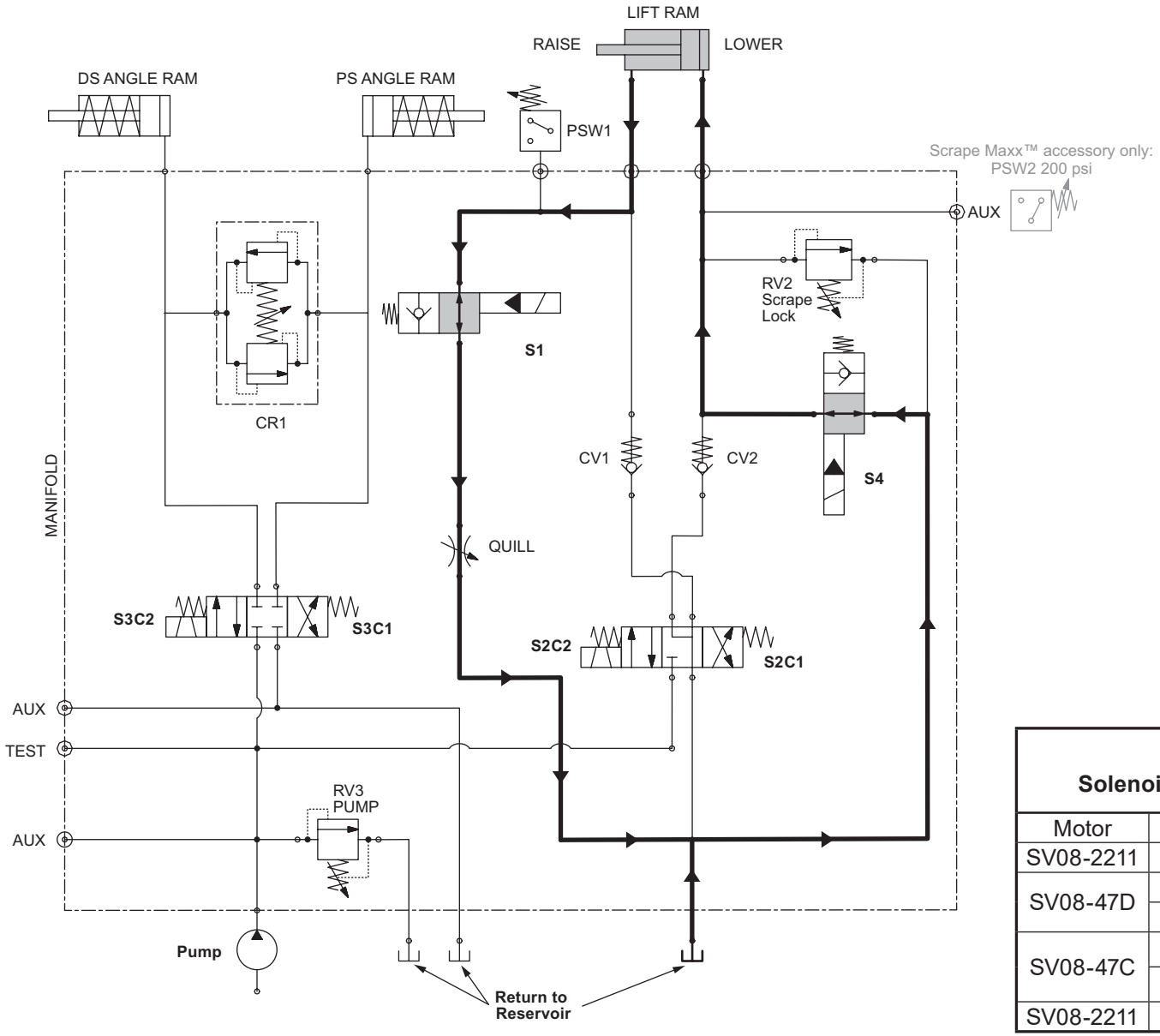

Solenoid		RAISE ↑	LOWER ↓	FLOAT	ANGLE RIGHT	ANGLE LEFT
Motor	M	ON			ON	ON
SV08-2211	S1		ON	ON		
SV08-47D	S2C1	ON				
	S2C2					
SV08-47C	S3C1					ON
	S3C2				ON	
SV08-2211	S4	ON	ON			

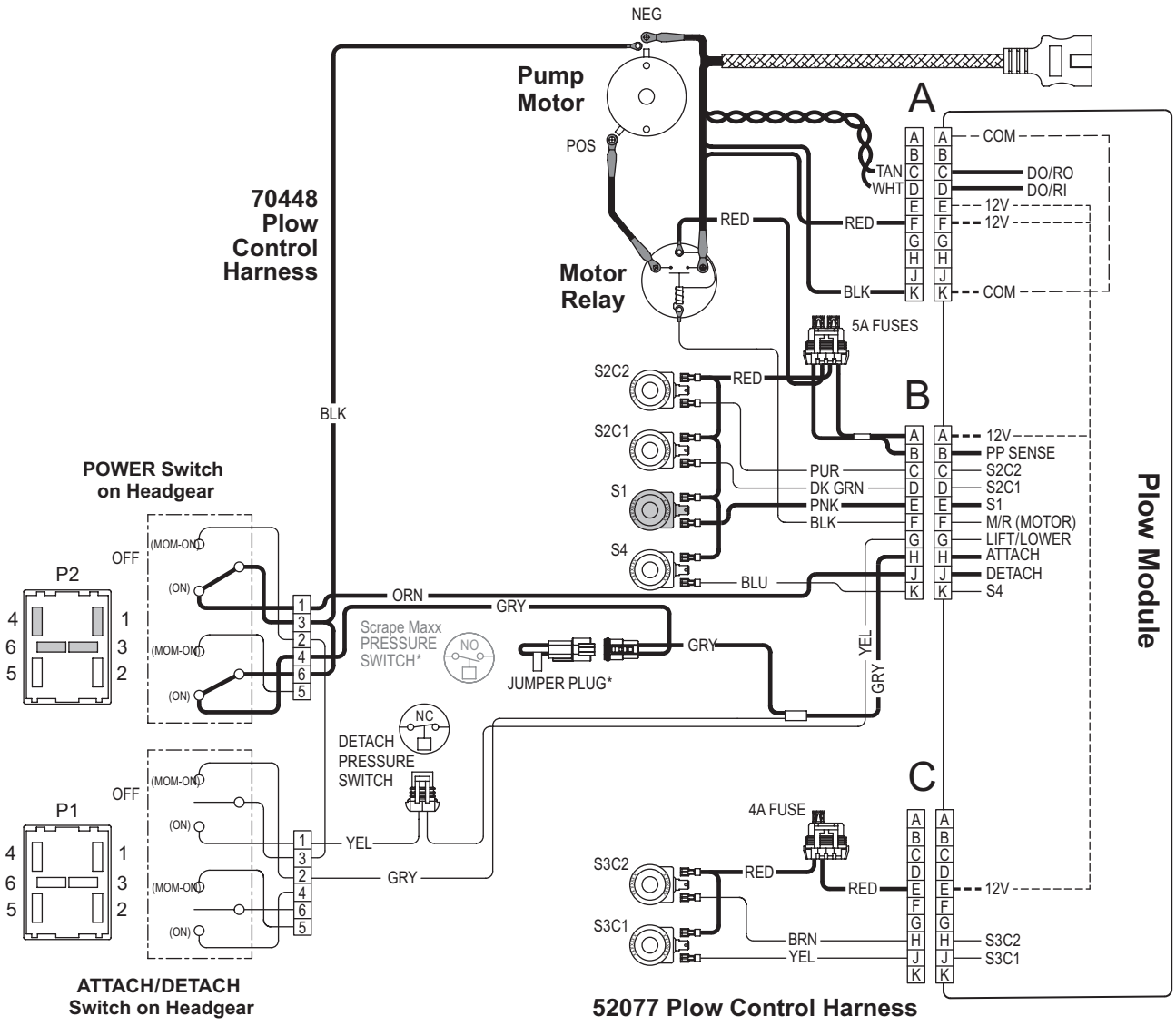

*Jumper plug is replaced by pressure switch when Scrape Maxx™ accessory is installed.

This page applies to snowplows without the Scrape Maxx™ down force accessory installed and enabled. Schematics for Scrape Maxx functions appear at the end of this section.

System Response

⚠ CAUTION

Battery voltage is supplied to the plow module, motor relay, and solenoid coils when the snowplow is connected to the vehicle.

When the FLOAT mode is active, the S1 cartridge will stay open until the RAISE function is activated.

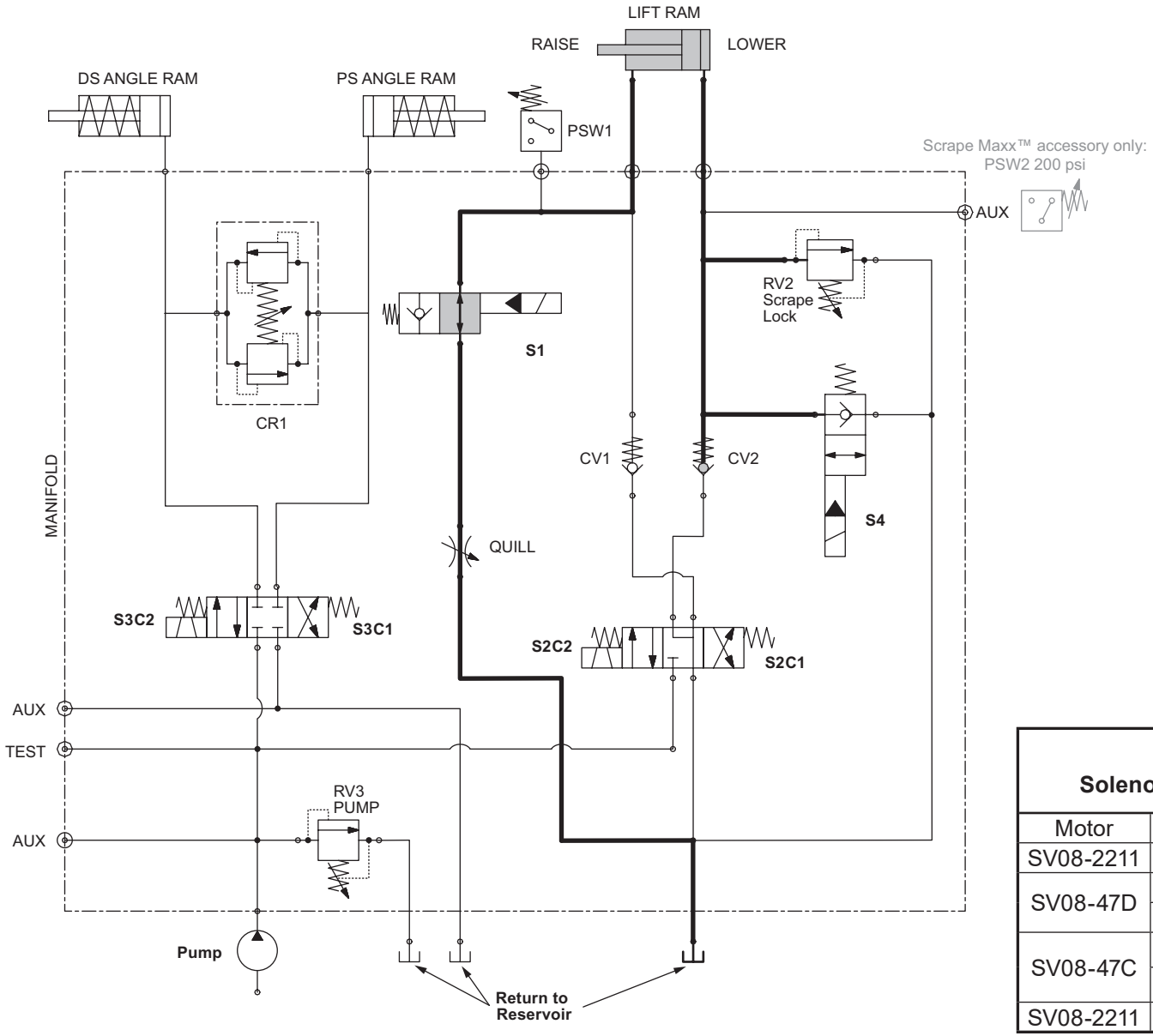

Solenoid		RAISE ↑	LOWER ↓	FLOAT	ANGLE RIGHT	ANGLE LEFT
Motor	M	ON			ON	ON
SV08-2211	S1		ON	ON		
SV08-47D	S2C1	ON				
	S2C2					
SV08-47C	S3C1					ON
	S3C2				ON	
SV08-2211	S4	ON	ON			

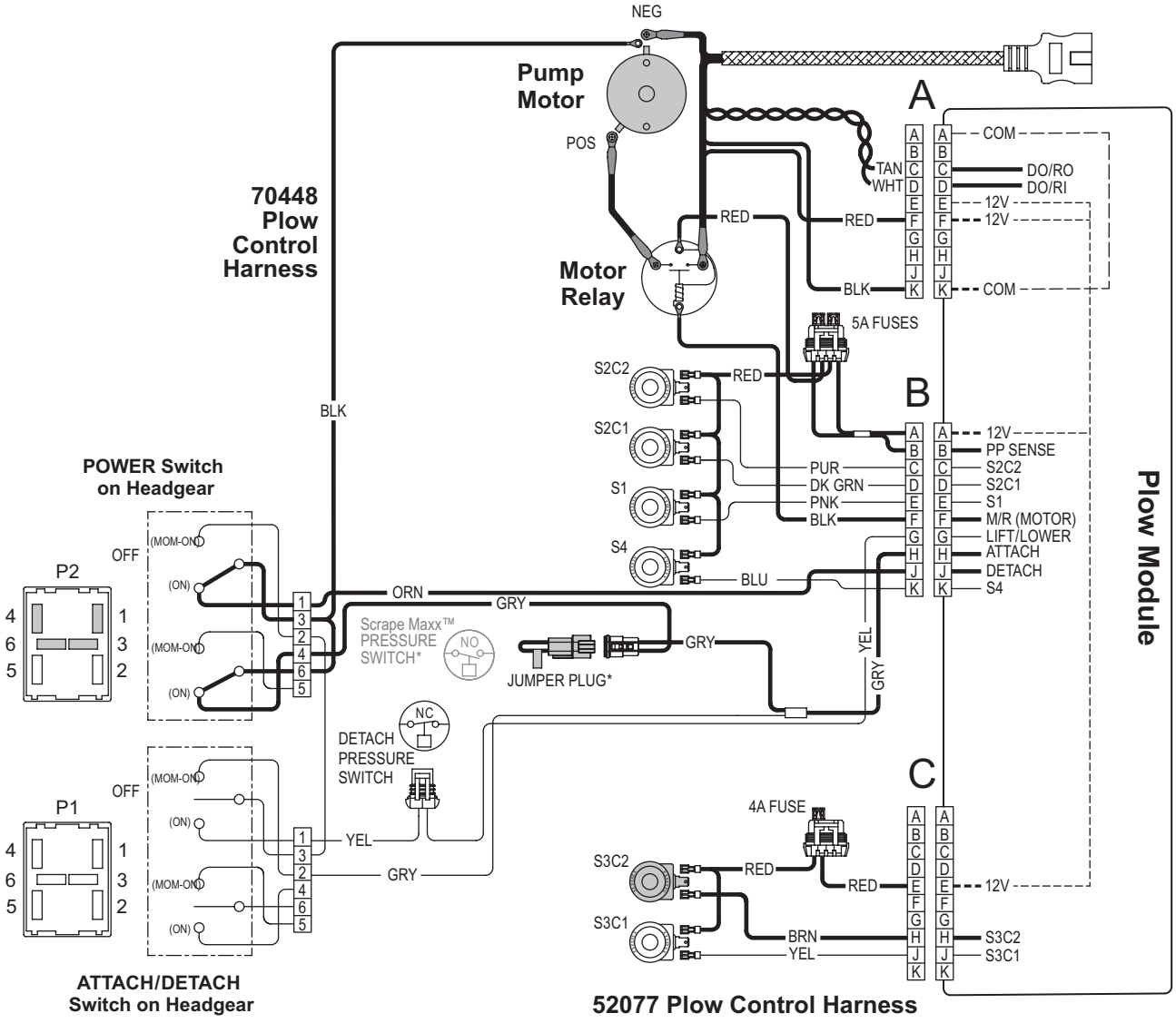

*Jumper plug is replaced by pressure switch when Scrape Maxx™ accessory is installed.

System Response

⚠ CAUTION

Battery voltage is supplied to the plow module, motor relay, and solenoid coils when the snowplow is connected to the vehicle.

1. Verify that the POWER switch (upper switch on headgear) is in the "PLOW" position.
2. When the angle RIGHT function is activated on the cab control, the control sends a signal to the plow module to complete the ground path for the electrical circuit, activating the motor relay and solenoid cartridge valve S3C2.
3. Hydraulic fluid from the pump flows through the activated S3C2 and into the base end of the driver-side angle cylinder, causing the ram to extend.

   At the same time, fluid is forced out from the base end of the passenger-side angle ram, through the already activated S3C2, and back to the reservoir.

ANGLE RIGHT — HYDRAULIC

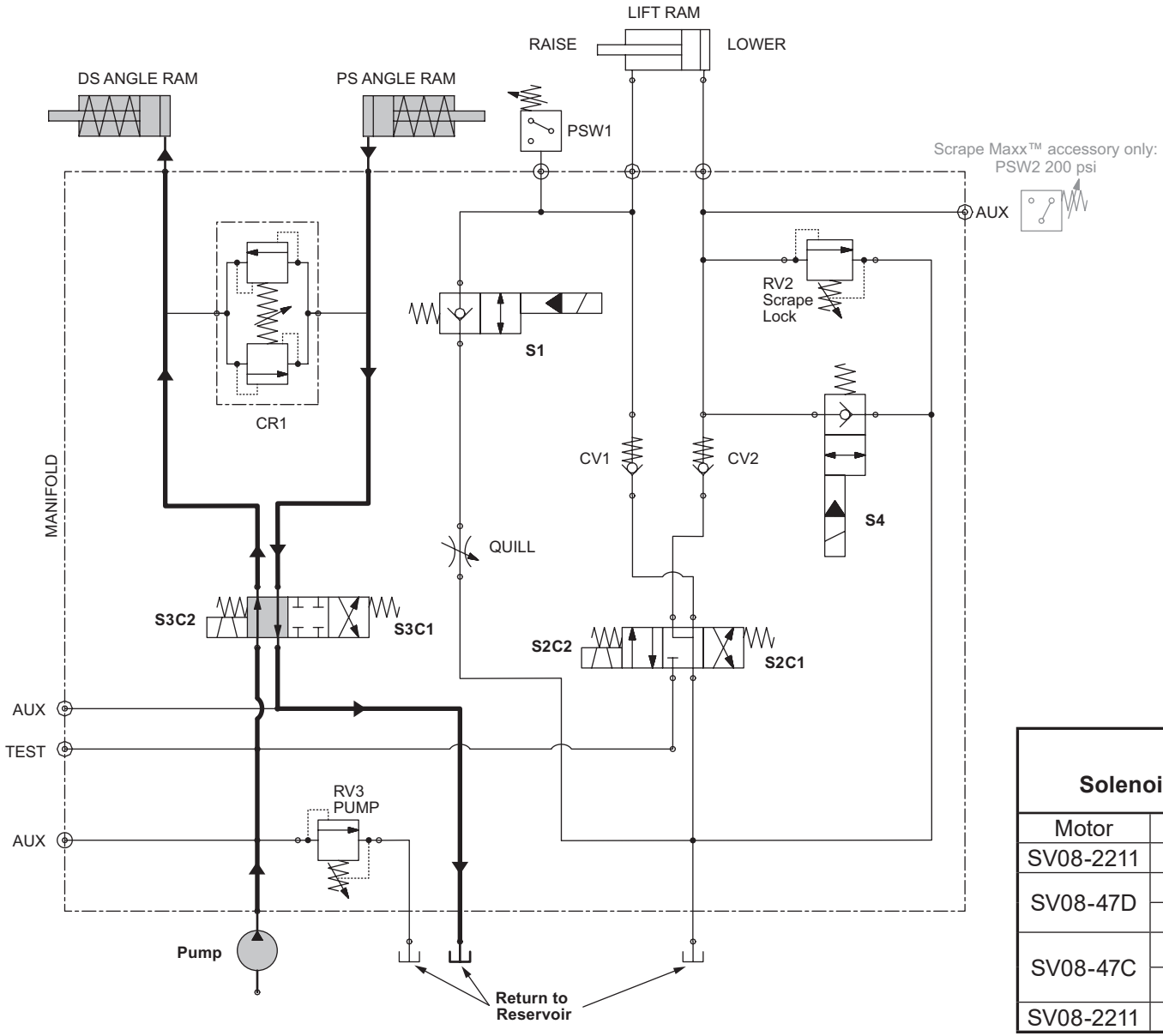

Solenoid		RAISE ↑	LOWER ↓	FLOAT	ANGLE RIGHT	ANGLE LEFT
Motor	M	ON			ON	ON
SV08-2211	S1		ON	ON		
SV08-47D	S2C1	ON				
	S2C2					
SV08-47C	S3C1					ON
	S3C2				ON	
SV08-2211	S4	ON	ON			

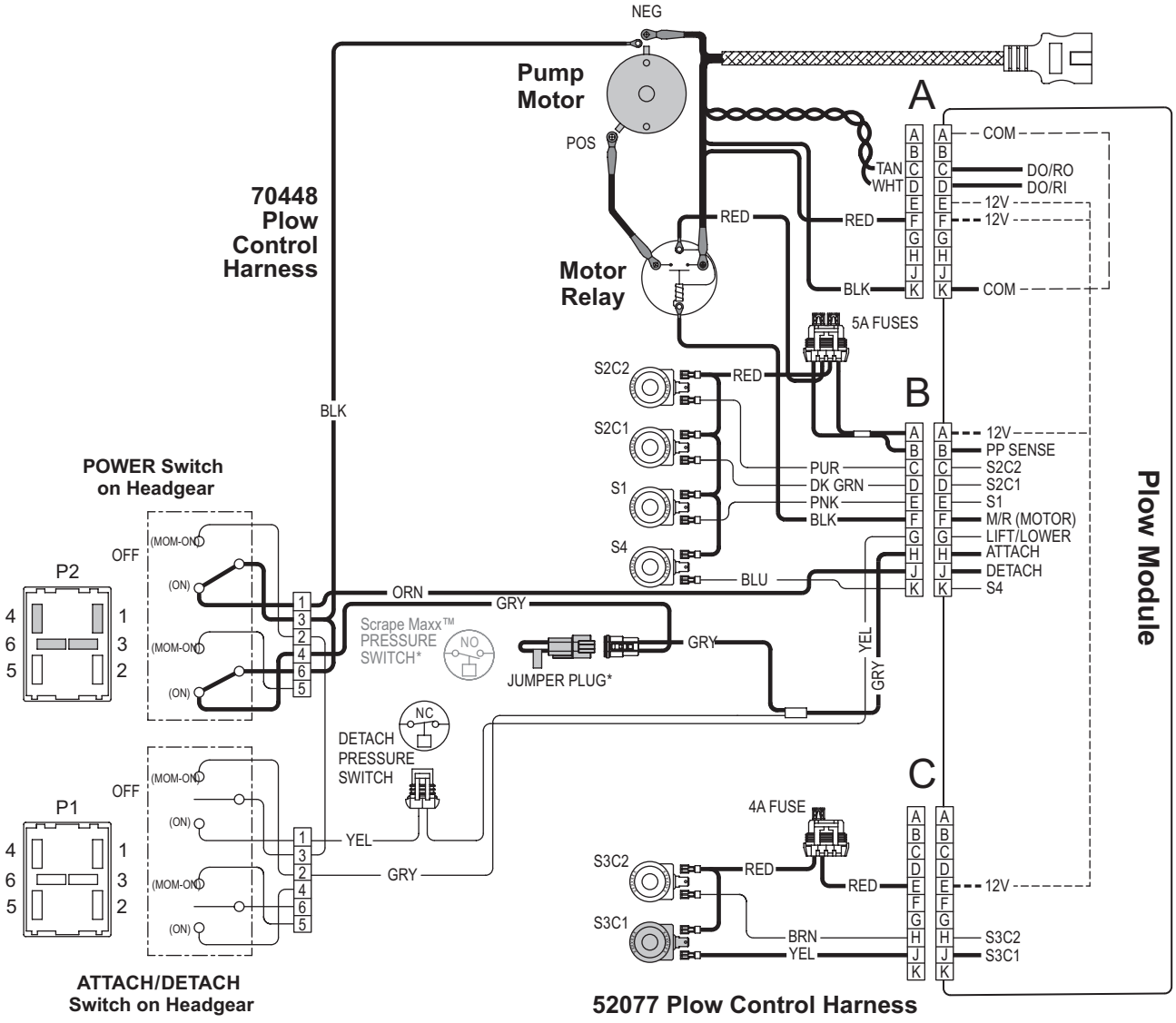

*Jumper plug is replaced by pressure switch when Scrape Maxx™ accessory is installed.

System Response

⚠ CAUTION

Battery voltage is supplied to the plow module, motor relay, and solenoid coils when the snowplow is connected to the vehicle.

1. Verify that the POWER switch (upper switch on headgear) is in the "PLOW" position.
2. When the angle LEFT function is activated on the cab control, the control sends a signal to the plow module to complete the ground path for the electrical circuit, activating the motor relay and solenoid cartridge valve S3C1.
3. Hydraulic fluid from the pump flows through the activated S3C1 and into the base end of the passenger-side angle cylinder, causing the ram to extend.

   At the same time, fluid is forced out from the base end of the driver-side angle ram, through the already activated S3C1, and back to the reservoir.

ANGLE LEFT — HYDRAULIC

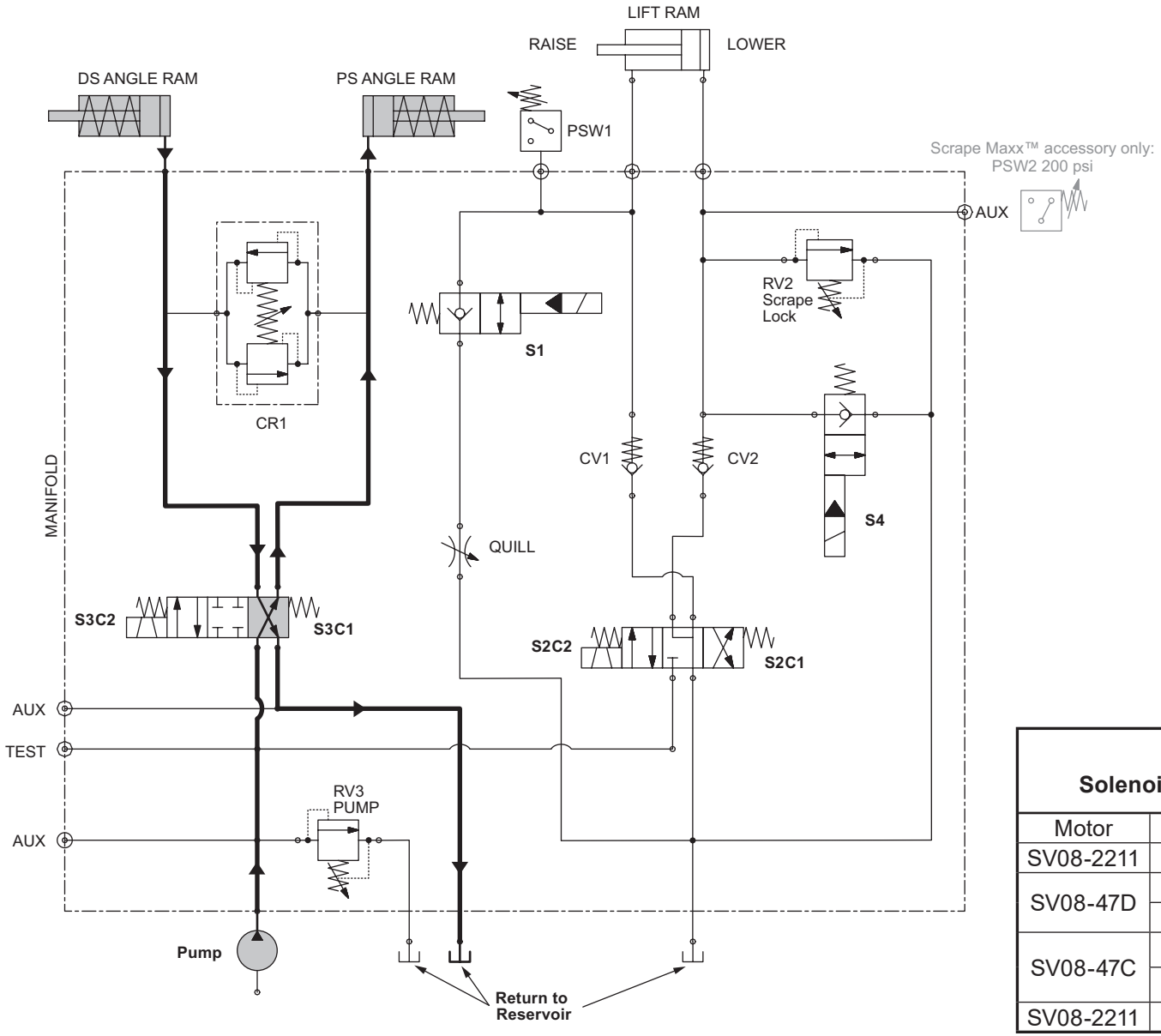

Solenoid		RAISE ↑	LOWER ↓	FLOAT	ANGLE RIGHT	ANGLE LEFT
Motor	M	ON			ON	ON
SV08-2211	S1		ON	ON		
SV08-47D	S2C1	ON				
	S2C2					
SV08-47C	S3C1					ON
	S3C2				ON	
SV08-2211	S4	ON	ON			

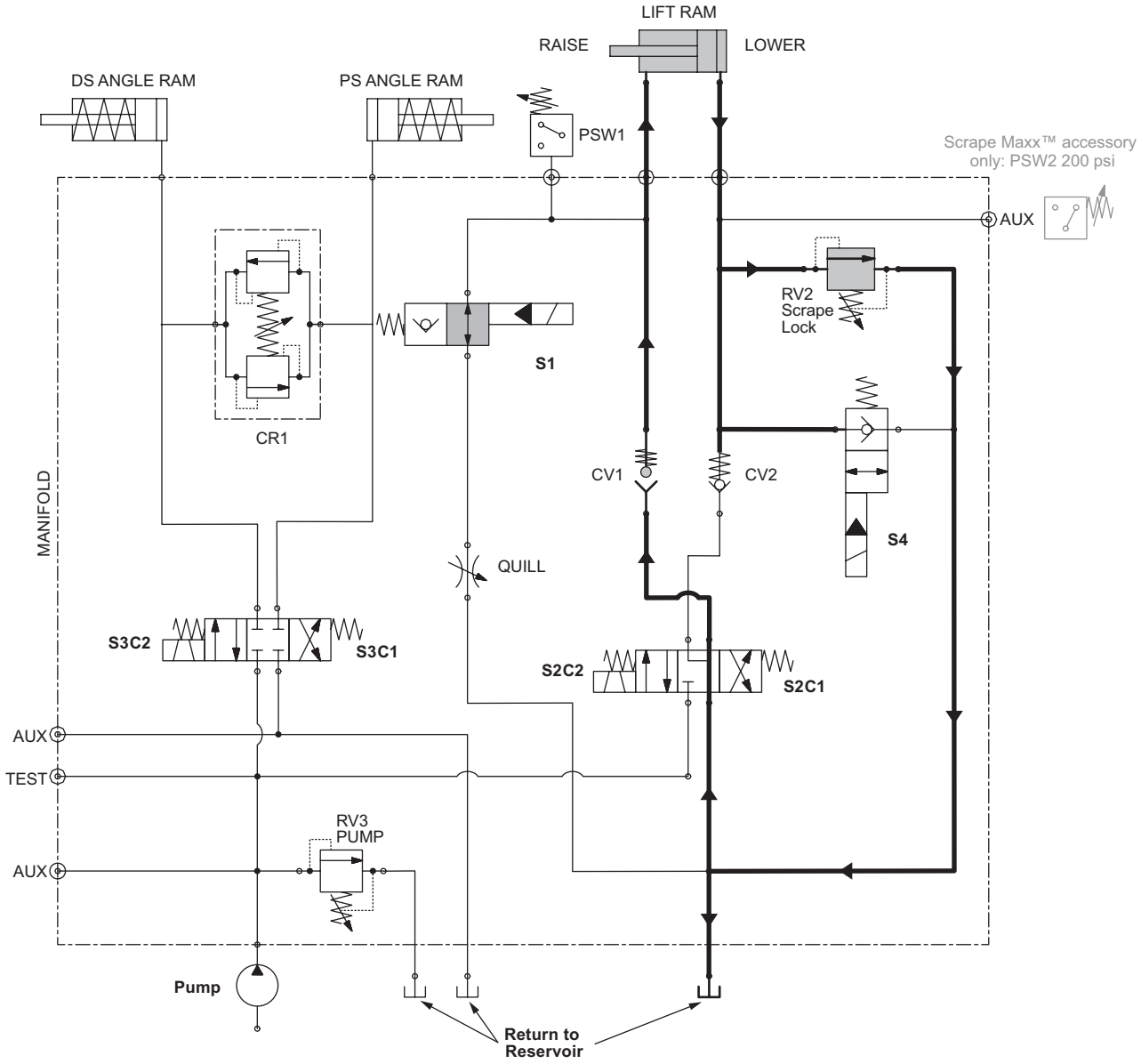

This page applies to snowplows without the Scrape Maxx™ down force accessory installed. Schematics for Scrape Maxx functions appear at the end of this section.

System Response

⚠ CAUTION

Battery voltage is supplied to the plow module, motor relay, and solenoid coils when the snowplow is connected to the vehicle.

Once the blade is lowered and in FLOAT mode, the built-in scrape lock function holds the blade to the ground. This is accomplished by hydraulic fluid being held by check valve CV2, solenoid cartridge valve S4, and relief valve RV2.

When a high spot in the surface is encountered while plowing, pressure increases on the base end of the lift cylinder. Once this pressure reaches 425 psi (HD snowplows) or 550 psi (RD and LT snowplows), RV2 will open, allowing the blade to rise up over the high spot. Fluid pushed out of the base end of the lift ram cylinder passes through the inactivated S2 cartridge valve, through CV1, and into the rod end of the lift ram cylinder. Due to the difference in volume between the base end and rod end, extra fluid will be returned to the reservoir.

After the high spot is passed, the blade drops back down to maintain contact with the surface. As the lift cylinder re-extends, fluid is pushed out of the rod end, through the active S1, and around to the base end of the cylinder. Additional fluid is drawn out of the reservoir as needed to fill the base end.

Pump Pressure Relief

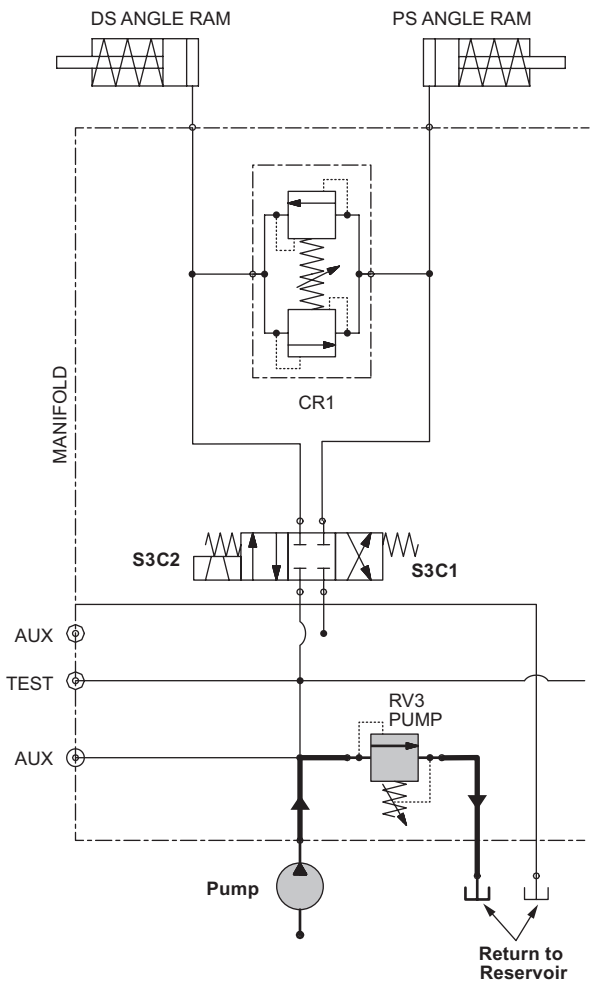

RV3 Settings
1800 psi for LT and RD snowplows
2000 psi for HD snowplow

Striking an Object While Plowing – System Response

Angle Left Relief

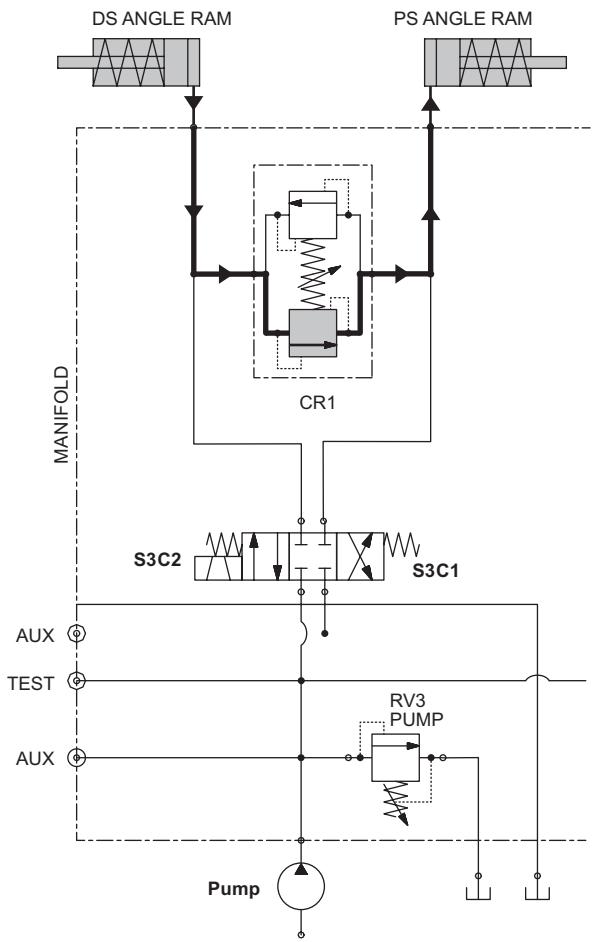

Angle Right Relief

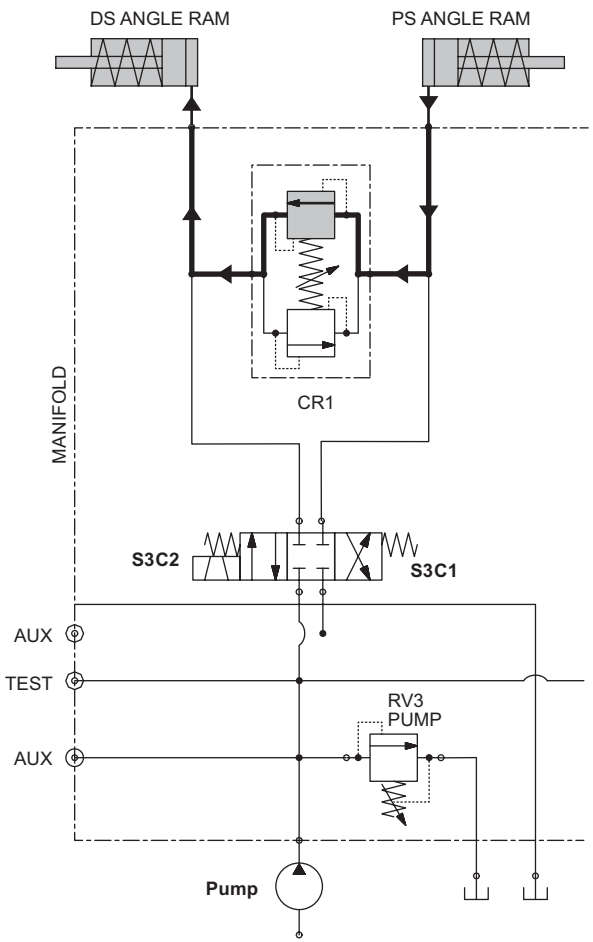

When the blade strikes an object while plowing, the force of impact increases hydraulic pressure in the base end of the angle ram on the affected end of the blade. If the pressure exceeds 4000 psi, crossover relief valve CR1 opens, allowing hydraulic fluid to flow from the base end of the affected cylinder to the base end of the opposite cylinder.

NOTE: The bidirectional CR1 valve is not adjustable.

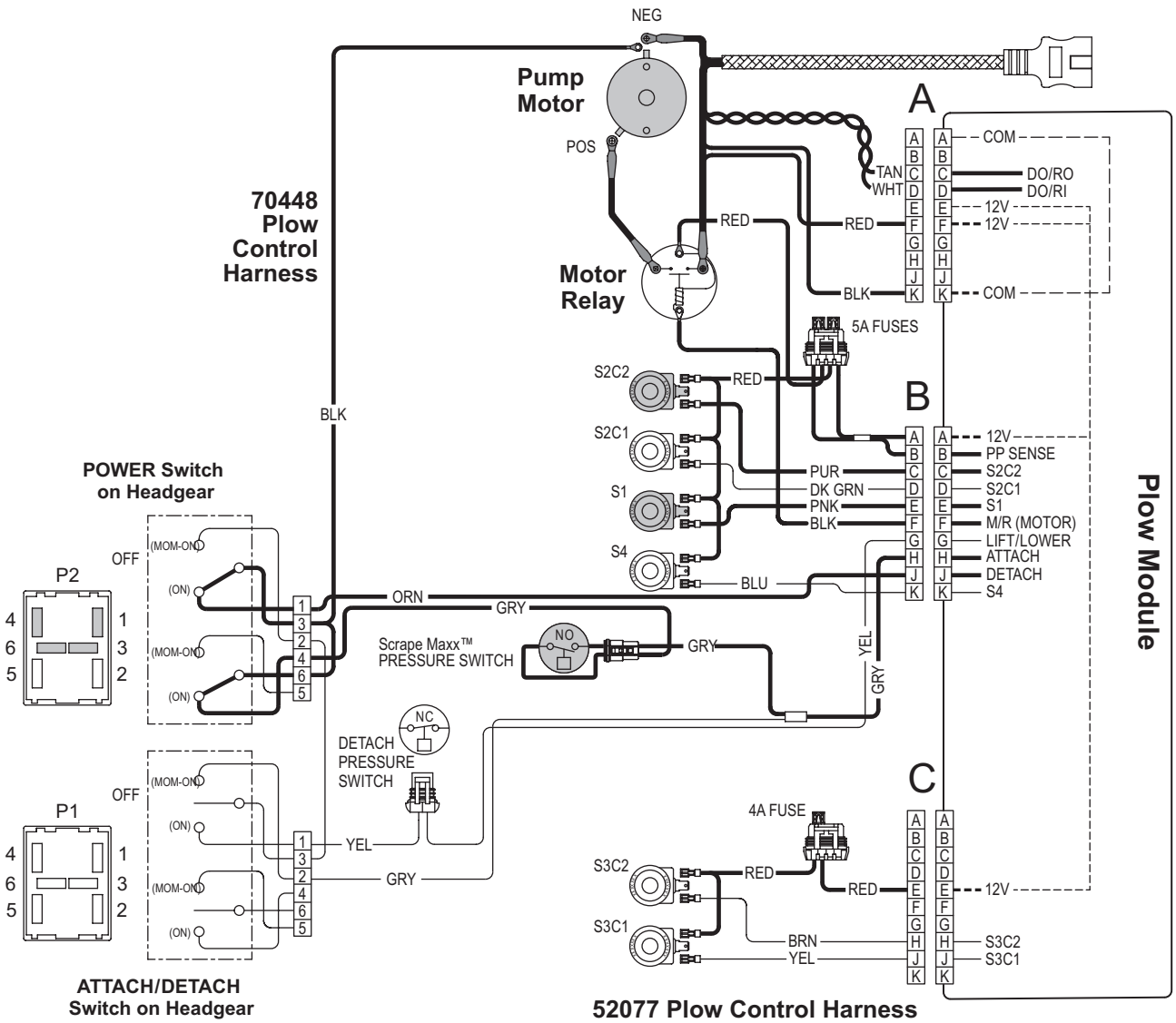

System Response

⚠ CAUTION

On units with the Scrape Maxx down force accessory installed and enabled, the hydraulic pump will cycle ON and OFF automatically when the vehicle ignition is ON and the blade is in LOWER/FLOAT mode.

⚠ CAUTION

Battery voltage is supplied to the plow module, motor relay, and solenoid coils when the snowplow is connected to the vehicle.

1. Verify that the POWER switch (upper switch on headgear) is in the "PLOW" position.
2. With the Scrape Maxx feature enabled, when the LOWER function is activated on the cab control, the control signals the plow module to complete the ground path for the electrical circuit, activating the motor relay and solenoid cartridge valves S2C2 and S1.
3. Hydraulic fluid from the pump flows through the activated S2C2, through CV2, and into the base end of the lift cylinder, causing the ram to extend.
4. The extending ram pushes fluid out from the rod end of the cylinder, through the activated S1 and the quill, then into the reservoir, dropping the blade to the ground.

FLOAT: BUILD DOWN FORCE – HYDRAULIC (Scrape Maxx™ Mode Enabled)

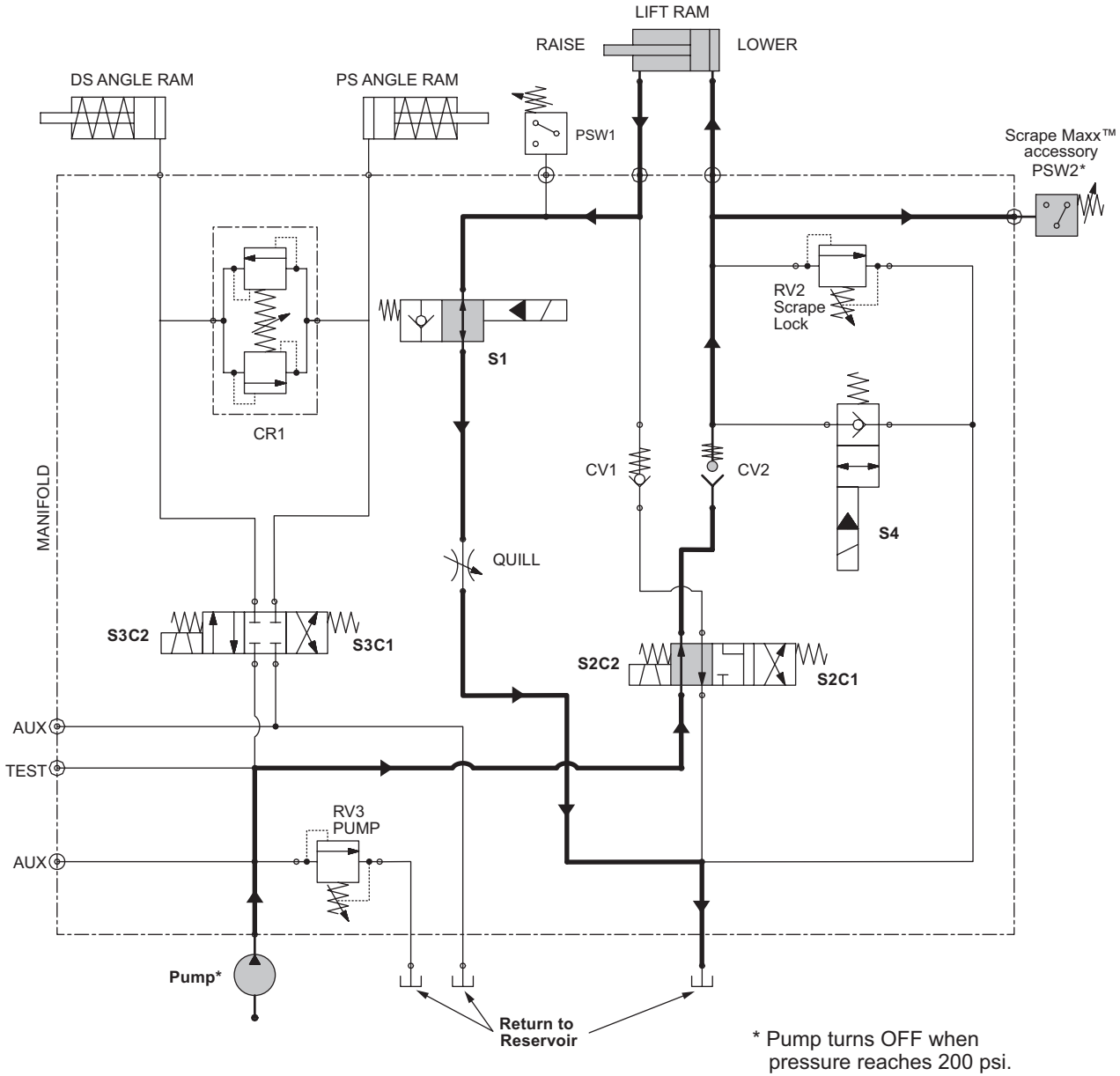

5. Once the blade is on the ground, releasing the LOWER function, the pump will continue to run and the S2C2 cartridge valve will remain open until the line pressure at the base of the lift cylinder reaches 200 psi, at which time the Scrape Maxx pressure switch (PSW2) will shut off the pump and S2C2 will close.

   The S1 cartridge valve will remain open until FLOAT mode is canceled.

Solenoid		BUILD PRESSURE TO 200 psi	CYCLE TO MAINTAIN 200 psi
Motor	M	ON	ON/OFF
SV08-2211	S1	ON	**
SV08-47D	S2C1		
	S2C2	ON	ON/OFF
SV08-47C	S3C1		
	S3C2		
SV08-2211	S4		

** S1 remains in open position.

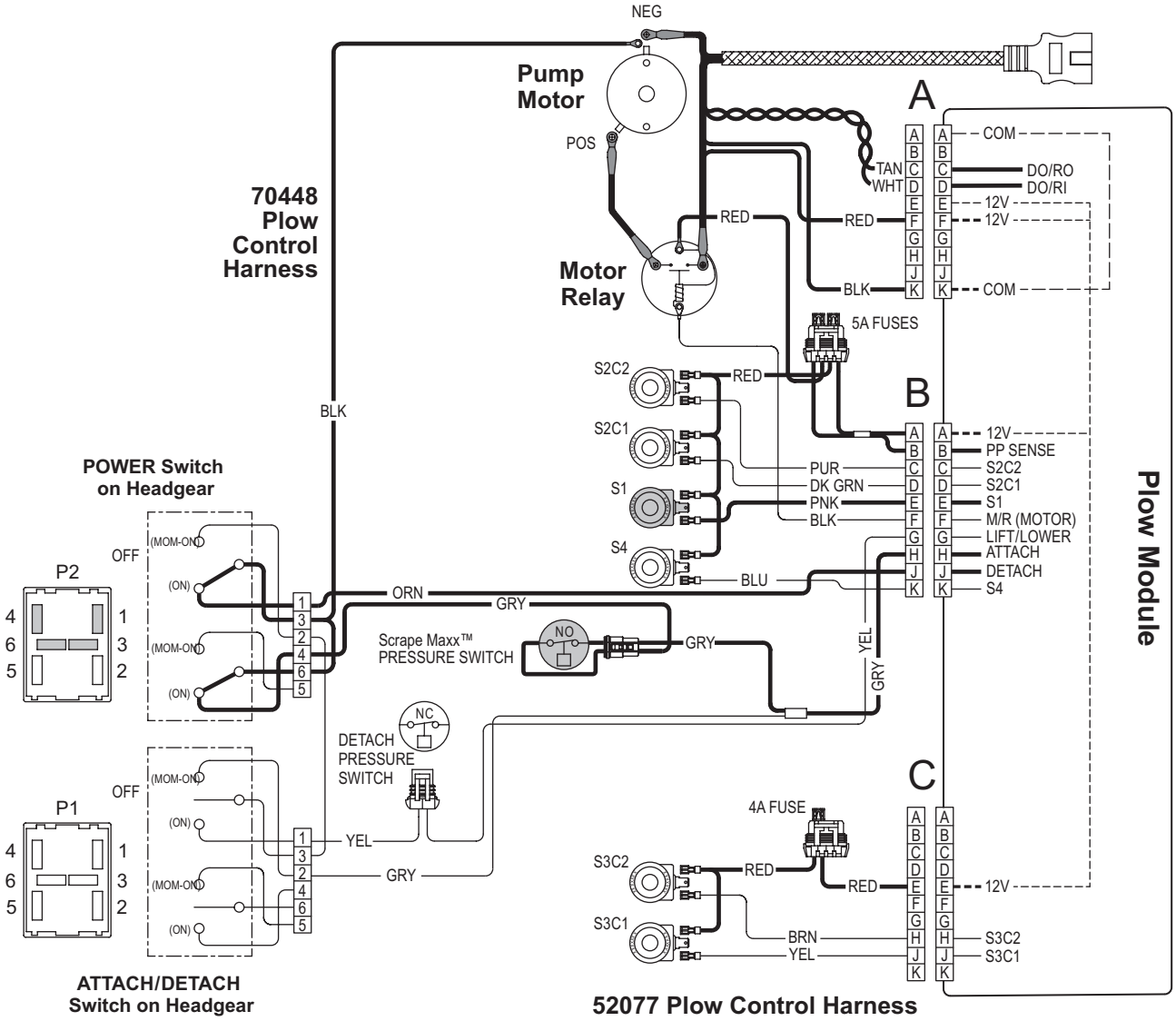

System Response

⚠ CAUTION

On units with the Scrape Maxx down force accessory installed and enabled, the hydraulic pump will cycle ON and OFF automatically when the vehicle ignition is ON and the blade is in LOWER/FLOAT mode.

⚠ CAUTION

Battery voltage is supplied to the plow module, motor relay, and solenoid coils when the snowplow is connected to the vehicle.

1. As the blade raises and lowers to follow surface contours while plowing, hydraulic pressure at the base end of the lift cylinder may drop below 200 psi. The drop in pressure allows the Scrape Maxx pressure switch (PSW2) to open, activating the hydraulic pump and the S2C2 solenoid cartridge valve.
2. Once hydraulic pressure at the base of the lift cylinder builds back up to 200 psi, the pressure switch closes, shutting off the pump and closing the S2C2 valve.

NOTE: If the pump continues run when the blade is on the ground while in FLOAT mode, the scrape lock relief valve (RV2) needs to be adjusted. Recommended relief setting for RV2 is 425 psi.

FLOAT: MAINTAIN DOWN FORCE, PUMP OFF – HYDRAULIC (Scrape Maxx™ Mode Enabled)

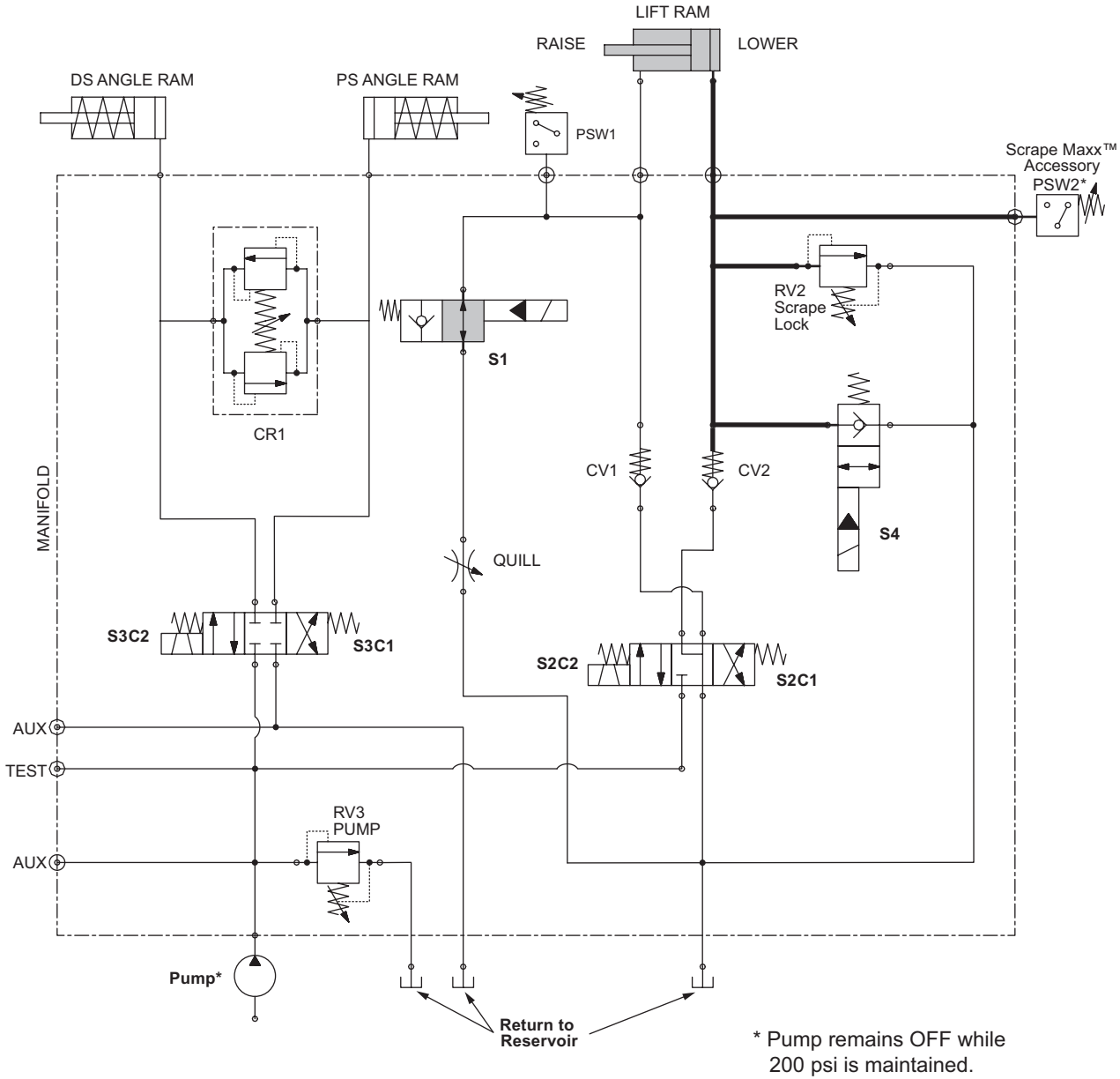

* Pump remains OFF while 200 psi is maintained.

Solenoid		BUILD PRESSURE TO 200 psi	CYCLE TO MAINTAIN 200 psi
Motor	M	ON	ON/OFF
SV08-2211	S1	ON	**
SV08-47D	S2C1		
	S2C2	ON	ON/OFF
SV08-47C	S3C1		
	S3C2		
SV08-2211	S4		

** S1 remains in open position.

FLOAT: MAINTAIN DOWN FORCE, PUMP ON – HYDRAULIC (Scrape Maxx™ Mode Enabled)

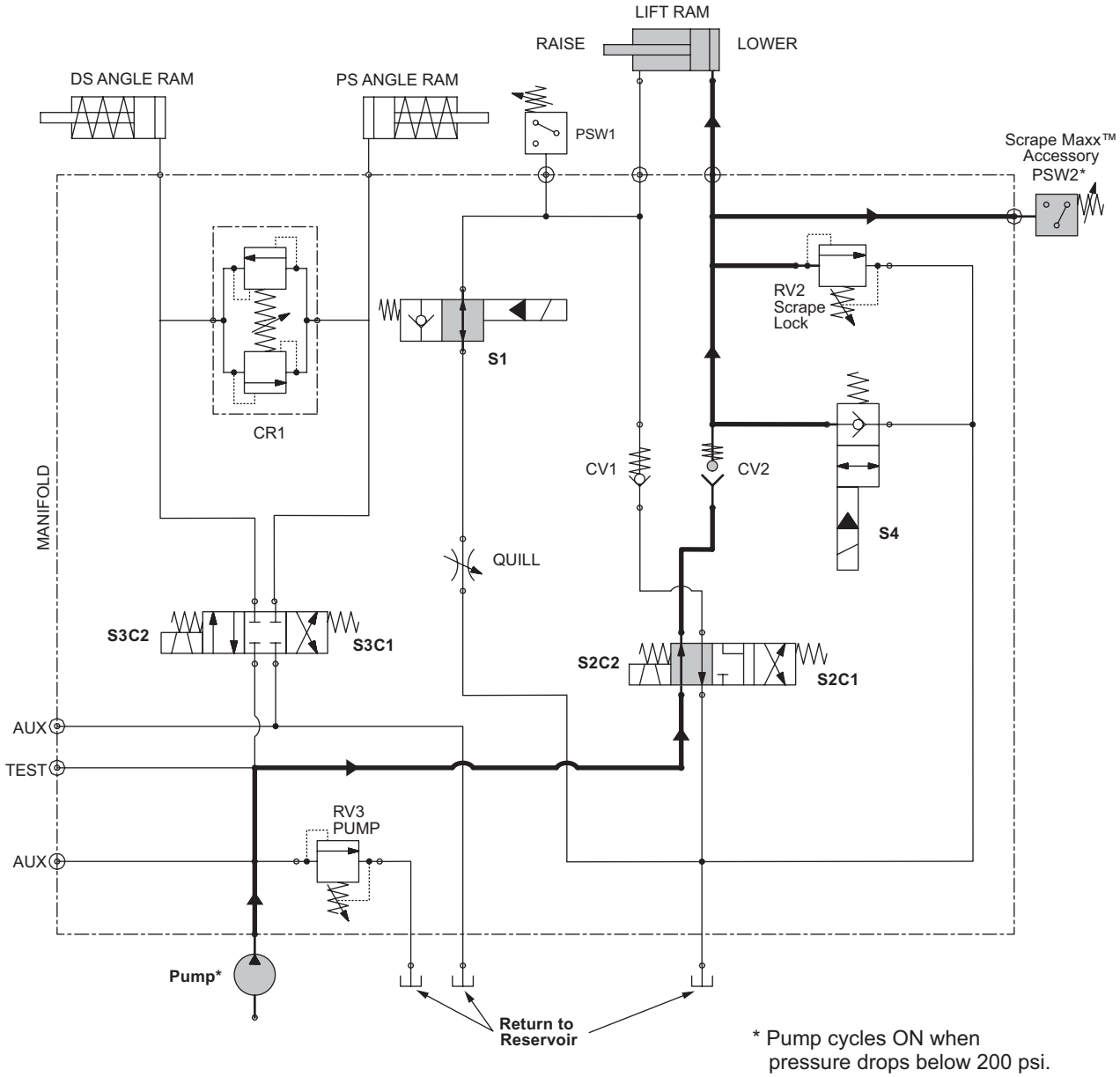

⚠ CAUTION

On units with the Scrape Maxx down force accessory installed and enabled, the hydraulic pump will cycle ON and OFF automatically when the vehicle ignition is ON and the blade is in LOWER/FLOAT mode.

⚠ CAUTION

Battery voltage is supplied to the plow module, motor relay, and solenoid coils when the snowplow is connected to the vehicle.

Solenoid		BUILD PRESSURE TO 200 psi	CYCLE TO MAINTAIN 200 psi
Motor	M	ON	ON/OFF
SV08-2211	S1	ON	**
SV08-47D	S2C1		
	S2C2	ON	ON/OFF
SV08-47C	S3C1		
	S3C2		
SV08-2211	S4		

** S1 remains in open position.

FLOAT: Blade Rises to Follow Surface – HYDRAULIC (Scrape Maxx™ Mode Enabled)

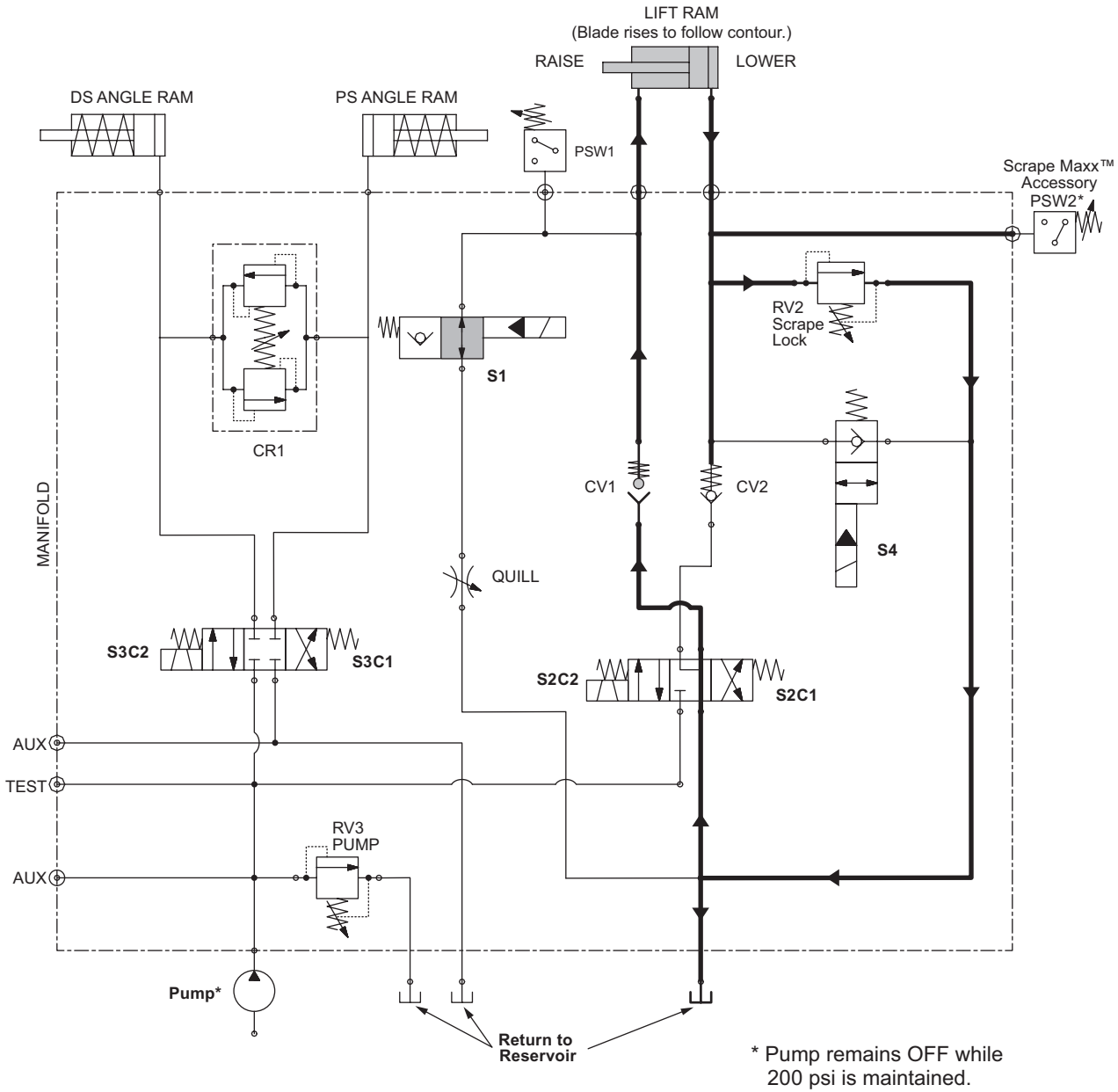

⚠ CAUTION

On units with the Scrape Maxx down force accessory installed and enabled, the hydraulic pump will cycle on and off automatically when the vehicle ignition is ON and the blade is in LOWER/FLOAT mode.

⚠ CAUTION

Battery voltage is supplied to the plow module, motor relay, and solenoid coils when the snowplow is connected to the vehicle.

HOW TO USE THE TROUBLESHOOTING GUIDE

All malfunctions of the SnowEx® straight blade snowplows can be categorized as structural, electrical, or hydraulic. Structural issues are generally related to the blade, A-frame, lift frame, and mount components, and are usually identified by visual inspection. However, electrical and hydraulic issues can be difficult to trace.

Read and understand the hydraulic system and electrical system overview pages near the beginning of this manual before attempting to troubleshoot.

Because of the relative complexity of the snowplow electrical and hydraulic systems, some conditions must be met in order to develop valid tests.

If the listed conditions are not met, the test procedures can provide in inaccurate results and cause wasted time.

In many cases, simply satisfying the listed conditions solves the problem, and further testing is not needed.

1. Go to "Before You Begin" (next page) and satisfy the listed conditions. These conditions ***must*** be met before proceeding to the troubleshooting tables and performing any tests.
2. If a lighting problem exists, proceed to the relevant troubleshooting tables for vehicle headlamps, snowplow headlamps, snowplow park/turn lamps, or snowplow DRLs. Each table presents a list of basic test questions and solutions to common problems.
3. If the problem is not related to the headlamps, park/turn lamps, or DRLs, skip the lighting system troubleshooting pages and go to the hydraulic system troubleshooting pages.
4. Follow along sequentially through the tables and tests, referring to the Electrical & Hydraulic Schematics section and other sections of this manual as needed.

ELECTRICAL TESTING

Read and understand the electrical circuit operation information in the Vehicle-Side Electrical Components section. A simple 12-volt (12V) test light with a ground lead can be used for circuit testing in most cases. The exception is the paired multiplex wiring, which carries a low-level signal from the control to the plow module. In this case, an ohmmeter may be used to check continuity.

When directed to check for 12V, ground the test lamp lead and probe the terminal. When asked to check for ground, attach the test lamp lead to +12V and probe the terminal.

NOTE: 12V is a nominal value. If using a voltmeter, actual voltage will vary with the vehicle and presence of loads in tested circuits. Continuity alone does not guarantee a good circuit. Poor connectors or damaged wires may have continuity but be unable to carry sufficient current.

BEFORE YOU BEGIN

Before proceeding, or carrying out any tests, you must perform the following steps:

1. **Verify** that the customer has accurately and completely described the problem. Observe all lighting and snowplow functions.
2. **Check the obvious,** to confirm that:
   a. The snowplow is attached to the vehicle and all harnesses are connected.
   b. The ignition is turned ON (or the engine is running, if operating the control from within the cab).
   c. The control is connected in the cab and turned ON. The control power LED is in a steady state and is not flashing.
   d. The fuses are good.
   e. The vehicle battery and charging system are in good condition, and battery connections are clean and tight.
   f. Harness connector pins and terminals are free of corrosion, ensuring good connections, and coated with dielectric grease.

⚠ CAUTION

Fill the reservoir to the fill level only. Do not overfill. Overfilling could damage the unit.

⚠ CAUTION

Do not mix different types of hydraulic fluid. Some fluids are not compatible and may cause performance problems and product damage.

   g. The hydraulic reservoir is filled to the proper level with recommended fluid when the lift ram is fully retracted. (See "SnowEx® Straight Blades – Hydraulic System Specifications" in the **Hydraulic System** section of this guide.)
   h. There are no fluid leaks from hoses, fittings, rams, or the hydraulic unit.
   i. All hoses are routed correctly.
   j. Coil wire connections are secure and correct.
   k. Correct cartridges are installed in the proper locations.

VEHICLE HEADLAMPS

Incorrect Operation or No Headlamps

	BASIC CHECK QUESTIONS	SOLUTIONS
1	DRL mode/automatic headlamp functioning?	Fully understand OEM headlamp operation; refer to vehicle owner's manual.
2	Correct isolation module kit installed for application?	Verify per Power Match at *www.snowexproducts.com*.
3	OEM lights operating correctly prior to installation?	OEM headlamps must be fully operational for correct isolation module operation.
4	OEM fuse tests good?	Replace with proper fuse.
5	OEM headlamp bulb operational?	Replace with proper bulb.
6	Plugged into OEM headlamp correctly?	Connect per isolation module Installation Instructions.
7	Harnesses in correct location at isolation module and installed per Installation Instructions?	Install using isolation module Installation Instructions.
8	Harnesses configured correctly for vehicle and/or kits using all needed adapters?	Install using isolation module Installation Instructions.
9	Correct harnesses and/or isolation module in kit?	Refer to isolation module Parts List.
10	Harness wired per drawing?	See electrical schematics in this guide.
11	Are power and ground in proper pin locations at isolation module?	See electrical schematics in this guide.
12	Are power and ground in proper pin locations to vehicle headlamp?	See electrical schematics in this guide.

SNOWPLOW HEADLAMPS

Incorrect Operation or No Headlamps

	BASIC CHECK QUESTIONS	SOLUTIONS
1	Automatic headlamp functioning?	Fully understand OEM headlamp operation; refer to vehicle owner's manual.
2	All harnesses connected at vehicle and snowplow?	Harnesses must be connected for all snowplow and headlamp functions.
3	Corrosion at harness connectors?	Replace as needed.
4	Ignition ON?	Ignition switch or vehicle park lamps must be ON for snowplow headlamps to operate.
5	Control powers up with key ON?	Go to "**Control/Cable/Plow Module Test**."
6	Correct isolation module kit installed for application?	Verify per Power Match at *www.snowexproducts.com*.
7	OEM headlamps operating correctly prior to installation?	OEM headlamps must be fully operational for correct isolation module operation.
8	OEM fuse tests good?	Replace with proper fuse.
9	Bulb operational?	Replace with proper bulb.
10	Plugged into OEM headlamp correctly?	Connect per isolation module Installation Instructions.
11	Harnesses in correct location at isolation module and installed per Installation Instructions?	Install using isolation module Installation Instructions.
12	Harnesses configured correctly for vehicle and/or kits using adapters?	Install using isolation module Installation Instructions.
13	Correct harnesses and/or isolation module in kit?	Refer to isolation module Parts List.
14	Harness wired per drawing?	See electrical schematics in this guide.
15	Are power and ground in proper pin locations at isolation module?	See electrical schematics in this guide.
16	Are power and ground in proper pin locations to vehicle headlamp?	See electrical schematics in this guide.

SNOWPLOW PARK/TURN LAMPS*

Incorrect Operation or No Park/Turn Lamps

	BASIC CHECK QUESTIONS	SOLUTIONS
1	OEM park/turn lamps working?	Refer to vehicle owner's manual for fuse location and size.
2	All harnesses connected at vehicle and snowplow?	Harnesses must be connected for all snowplow and headlamp functions.
3	Corrosion at harness connectors?	Replace as needed.
4	Ignition ON?	Ignition must be ON for snowplow turn lamps to operate.
5	Control powers up with key ON?	Go to "**Control/Cable/Plow Module Test.**"
6	Spliced into OEM park/turn circuit correctly?	Refer to isolation module Installation Instructions.
7	Harnesses in correct location at isolation module and installed per Installation Instructions?	Install using isolation module Installation Instructions.
8	Harness wired per drawing?	See electrical schematics in this guide.
9	Verify that power and ground are in proper pin locations at isolation module?	See electrical schematics in this guide.
10	Verify that power and ground are in proper pin locations to vehicle headlamp?	See electrical schematics in this guide.
11	Is bulb burned out?	Replace with proper bulb.

* Some applications may use the turn circuit for DRLs.

SNOWPLOW DRL LAMPS*

Incorrect Operation or No DRL Lamps

	BASIC CHECK QUESTIONS	SOLUTIONS
1	Fully understand OEM DRL operation?	Refer to vehicle owner's manual for DRL operation.
2	OEM headlamps and DRLs operating correctly?	OEM headlamps must be fully operational for correct isolation module operation.
3	OEM DRL fuse tests good?	Refer to vehicle owner's manual for fuse location and size.
4	All harnesses connected at vehicle and snowplow?	Harnesses must be connected for all snowplow and headlamp functions.
5	Corrosion at harness connectors?	Replace as needed.
6	Ignition ON?	Ignition must be ON for snowplow DRL operation.
7	Does control power up with key ON?	Go to **"Control/Cable/Plow Module Test"** in this guide.
8	Snowplow headlamp and park/turn lamps all working correctly?	See electrical schematics in this guide.
9	Correct isolation module kit installed for application?	Verify per Power Match at *www.snowexproducts.com*.
10	Isolation module and harnesses correctly installed per Installation Instructions?	Refer to isolation module Installation Instructions.
11	Harness wired per drawing?	See electrical schematics in this guide.
12	Is bulb burned out?	Replace with proper bulb.

* Snowplow DRLs operate as a series circuit and will illuminate bulb at half-intensity. In some applications, the OEM DRLs will stay illuminated with snowplow attached. See Vehicle-Side Electrical Components section for DRL operation.

VEHICLE LIGHTING CHECK

1. Verify the operation of all vehicle front lighting prior to connecting the snowplow harness.
2. Check the operation of the snowplow lights with snowplow mounted to vehicle and all harnesses connected.

   Turn signals and parking lamps

   Parking lamps ON:
   - Both vehicle and snowplow parking lamps should be ON at the same time.

   Driver-side turn signal ON:
   - Both vehicle and snowplow driver-side turn signal lamps should flash at the same time.

   Passenger-side turn signal ON:
   - Both vehicle and snowplow passenger-side turn signal lamps should flash at the same time.

   Headlamps

   Move the vehicle headlamp switch to the "ON" position. Connecting and disconnecting the snowplow lighting harness plug should switch the lights between vehicle and snowplow as follows:

   Snowplow lighting harness DISCONNECTED:
   - Vehicle headlamps should be ON.
   - Snowplow headlamps should be OFF.

   Snowplow lighting harness CONNECTED:
   - Snowplow headlamps should be ON.
   - Vehicle headlamps should be OFF.

   The dimmer switch should toggle the headlamps between high and low beams. The high beam indicator on the dash should light when headlamps are placed in high beam.

   Daytime Running Lights (DRLs)

   An operational check of the vehicle and snowplow DRLs will depend on the vehicle model, vehicle DRL system, and type of isolation module installed.

   With headlamp switch OFF, activate the vehicle DRLs.

   Snowplow lighting harness DISCONNECTED:
   - Vehicle DRLs should be ON.
   - Snowplow headlamps should be OFF.

   Snowplow lighting harness CONNECTED and vehicle in DRL mode:
   - Check snowplow DRL function per type of Isolation Module installed.

   Joystick or Hand-Held Control

   The snowplow plugs **do** need to be connected to the vehicle harness connectors. The control power indicator light should light whenever the control ON/OFF switch and the ignition (key) switch are both in the "ON" position.

3. Connect all snowplow and vehicle harnesses. Raise the blade and aim the snowplow headlamps according to the Snowplow Headlamp Beam Aiming instructions included with the headlamps, and any state or local regulations.
4. Check the aim of the vehicle headlamps with the snowplow removed.

⚠ CAUTION

On 2-plug electrical systems, plug covers shall be used whenever snowplow is disconnected. Before 2019 vehicle battery cable is 12V unfused source.

5. When the snowplow is removed from the vehicle, install plug covers on the vehicle battery cable and lighting harness. Insert the snowplow battery cable and lighting harness into the cable boot on the snowplow.

Excerpted from HD Snowplow Installation Instructions (Lit. No. 52311, Rev. 03).

SOLENOID COIL ACTIVATION TEST (SCAT)

The main purpose of the SCAT test is to identify a problem as being either electrical or hydraulic. Each snowplow function is activated in turn and the associated coil or coils checked for magnetic pull.

SCAT Set-Up

Verify that harness B is properly attached to the solenoid coils. Refer to the labels on the hydraulic unit and the electrical schematics in this guide.

Install the Diagnostic Harness (PN 29290-2)

NOTE: The 29290-2 Diagnostic Harness Kit can be used with or without the snowplow connected to a vehicle. Follow the appropriate instructions for each testing situation.

1. **Off-Truck Testing:** Begin with Step 2.

   On-Truck Testing: Lower the blade to the ground. Put the vehicle in PARK or in gear and remove the ignition key to prevent others from starting the vehicle during testing. Disconnect the snowplow and vehicle battery cables.
2. Remove the hydraulic unit covers.
3. Remove the short red cable from the motor relay.
4. Unplug the snowplow connectors from ports A and B of the plow module.
5. Connect the diagnostic harness connectors A and B to the matching ports on the plow module (A to A and B to B).
6. Plug the connectors previously unplugged from the plow module into the matching connectors on the diagnostic harness (A to A and B to B).

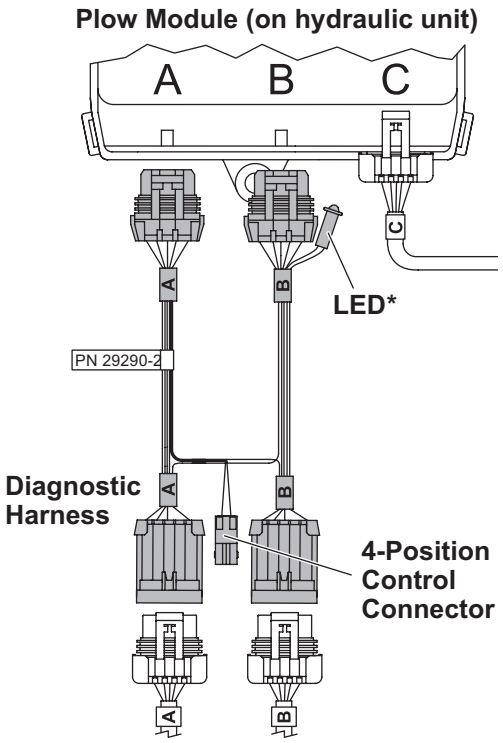

* Illuminates when motor relay is activated.

7. **Off-Truck Testing:** Connect the snowplow control into the 4-position control connector on the diagnostic harness.

   On-Truck Testing: Connect the snowplow control into the 4-position control connector either in the cab of the vehicle or on the diagnostic harness.
8. **Off-Truck Testing:** Connect a 12V power source to the snowplow battery cable (POSITIVE [+] 12V to the red wire and NEGATIVE [–] to the black wire). Turn ON the power source.

   On-Truck Testing: Reconnect the snowplow and vehicle battery cables.

NOTE: If you connected the control inside the cab of the vehicle, the engine does not need to be running, but the vehicle ignition key must be turned to the "ON" position before proceeding. If you connected the control to the diagnostic harness, the key should be left out of the ignition.

Adapted from 29290-2 Diagnostic Harness Kit Installation Instructions (Lit. No. 84968, Rev. 00).

Solenoid Coil Activation Test (SCAT), *continued*

Perform the SCAT

Turn the snowplow control ON and perform the test by activating the control for each function and checking for magnetic pull at all coils.

A solenoid coil is magnetized if a screwdriver held nearby is attracted.

NOTE: When performing the SCAT, make sure that the tool used to test for magnetic pull is NOT already magnetized.

Compare the test results with the coil activation data in the table at right.

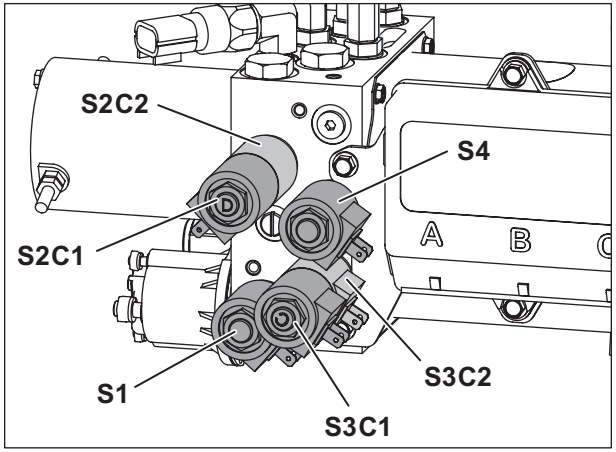

NOTE: If a control function times out before the desired coil activation is complete, release the button and press it again (hand-held control), or release the lever to the center position, then move it back into the desired function (joystick control).

If the motor relay LED is not illuminating when the motor relay function is activated, no output from plow module to motor relay is being detected.

If one or more coils are not magnetizing when they should be, you have an electrical problem. Using a test light, check the ground wires (not red) attached to the improperly acting coil(s) for switched ground while activating the function that should energize the coil(s).

If switched ground is present, go to the **Individual Solenoid Coil Test**.

If switched ground is not present, go to the **Control/Cable/Plow Module Test**.

If the motor relay and all coils are working properly, you have a hydraulic problem.

Solenoid Coil Activation Test (SCAT)	
Control Function	**Solenoid Coil(s) Activated**
Raise	S2C1, S4, motor relay
Lower/Float	S1, S4
Detach	S2C1, S4, motor relay
Attach	S1, S2C2, motor relay
Angle Right	S3C2, motor relay
Angle Left	S3C1, motor relay
Scrape Maxx™ Active	S1, S2C2, motor relay

Testing Double Stacked Coils

Only one coil at a time can be tested for magnetism. The following procedure enables both coils to be tested in turn without having to remove them from the valve stem.

1. Remove the thin nut that holds the stacked coils on the valve stem. Verify that the steel spacer washer is in place between the coils.
2. Separate the coils by approximately 1/2" and hold them in that position. Activate the function that uses one of the coils. If the coil has magnetism, the steel washer will be drawn to that coil. Activate the function for the second coil. If that coil has magnetism, the steel washer will be drawn to that side.
3. After testing, retighten the coil nut to 48–60 in-lb.

Excerpted from SnowEx® Snowplows Solenoid Coil Activation Test (SCAT) Instructions (Lit. No. 86260, Rev. 00).

Solenoid Coil Activation Test (SCAT), *continued*

After Completing a SCAT Test

Turn the snowplow control OFF.

Off-Truck Testing: Disconnect the 12V power source.

On-Truck Testing: Turn the vehicle ignition OFF. Disconnect the snowplow and vehicle battery cables.

1. Perform any required repairs and retest as needed.
2. When testing is completed, disconnect the power source or the snowplow and vehicle battery cables as described in Step 1 before unplugging the diagnostic harness. Plug the snowplow connectors back into ports A and B of the plow module.
3. Reconnect the short red cable to the motor relay. Replace the hydraulic unit covers.
4. **After On-Truck Testing:** Reconnect the snowplow and vehicle battery cables.

INDIVIDUAL SOLENOID COIL TEST

1. Remove both wires from coil terminals.
2. Attach an ohmmeter across the coil terminals.
3. A reading that is not approximately 7 ohms indicates coil is damaged and must be replaced.
4. Attach an ohmmeter to one coil terminal and to the steel washer at the end of the coil.
5. A reading that is not "open" indicates that the coil has internal shorts and needs to be replaced.
6. If both readings are OK (i.e., approximately 7 ohms across terminals *and* "open" between terminal and washer), then the coil is good.

NOTE: A good coil will draw approximately 1.5A.

CONTROL/CABLE/PLOW MODULE TEST

CONDITION	POSSIBLE CAUSE	CORRECTIVE ACTION
Control power light is not ON.	Snowplow is not connected.	Make sure grille plugs between snowplow and truck are properly connected.
	Incomplete harness connection(s) or damaged harness(es).	With the vehicle switched accessory ON, test the 4-pin connector inside the cab. If pin 1 does not have 12V and/or if pin 4 does not have ground, use the electrical schematic in this guide to trace the wires from the connector back to their source. Complete any incomplete connections and repair or replace any damaged wires and harnesses.
	Single-pin connector on vehicle lighting harness is not connected.	Make sure single-pin connector on vehicle lighting harness is properly connected.
	Harnesses connected to isolation module incorrectly.	Using the electrical schematic in this guide, verify that isolation module and harnesses are properly connected.
	Control fuse is blown.	Replace all blown fuses in under-hood electrical harnesses.
Control power light is blinking.	Poor connection, damaged control, or damaged plow module.	Make sure all plugs (control, between the snowplow and truck, on the snowplow, etc.) are properly connected.
		If all plugs are properly connected, install a properly working control. If problem is corrected, replace PC board and/or coiled cord in damaged control.
		If the problem is not corrected with properly working control, replace the plow module.
Control power light is ON, but snowplow does not respond.	Harnesses connected to isolation module incorrectly.	Using the electrical schematic in this guide, verify that isolation module and harnesses are properly connected.
	Blown fuse or damaged plow module.	Replace all blown fuses on vehicle and snowplow.
		If fuses are all okay, check for 12V at all coils and primary terminal of motor relay. If 12V is missing from any coil or relay, replace plow module. If 12V is present, go to next Possible Cause.
	Damaged harness(es) or cable(s).	Perform a Solenoid Coil Activation Test (SCAT) according to the instructions in this guide. Replace/repair any damaged harnesses and cables.
	Damaged control or plow module.	Install a properly working control. If the problem is corrected, replace PC board and/or coiled cord in damaged control.
		If the problem is not corrected with properly working control, replace the plow module.

To Safely Handle the Printed Circuit Board

⚠ CAUTION

The circuit board may be damaged by static electricity. Always touch ground before handling the PC board.

Before disassembling the control and touching the PC board, be sure to remove any static charge from yourself. Static charge can build up as a technician works on the control.

Best practice is for the technician to work at a properly grounded work station and wear a grounded wrist strap. In place of a proper work station, the technician should work in an oil- and solvent-free area and touch a good ground each time before touching the PC board while servicing the unit.

Handle the PC board by the edges only.

Do not touch the carbon (black) areas of the keypad. Skin oils will deteriorate the contact area.

MOTOR AND MOTOR RELAY TEST

⚠ WARNING

Keep 8' clear of the blade when it is being raised, lowered, or angled. Do not stand between vehicle and blade or directly in front of the blade. If the blade hits or drops on you, you could be seriously injured.

Perform this test if the control lights up and turns ON but the motor does not run.

1. Check both fuses on harness B. Replace any blown fuses, then retest snowplow function.
2. Disconnect the vehicle battery cable from the plow battery cable. Disconnect the 8" red battery cable from the large terminal of the motor relay and isolate it to eliminate potential for accidental blade movement during testing.
3. Reconnect the vehicle battery cable to the plow battery cable. Check for 12V at the small terminal of the motor relay with the red wire attached to it.

   If 12V is not present, check the red wire and harness B. Replace/repair either the wire or the harness as needed.

   If 12V is present at the small relay terminal with the red wire, turn the control ON, then check for switched ground on the small terminal with the black wire attached to it while activating any function except LOWER.

   If switched ground is not present, check the black wire and harness B of the plow module. Replace/repair either the wire or the harness as needed.
4. Check for switched 12V at the empty large motor relay terminal while activating any control function except LOWER. The empty terminal is the terminal that would normally connect the 8" red battery cable.

   If switched 12V is not present, disconnect the vehicle battery cable from the plow battery cable and replace the motor relay.

   If switched 12V is present at the empty large motor relay terminal, disconnect the plow battery cable from the battery and replace the motor.
5. Once testing is complete, reinstall the 8" red battery cable. Reconnect the battery cables, then recheck the snowplow functions.

HARNESS CONNECTIONS

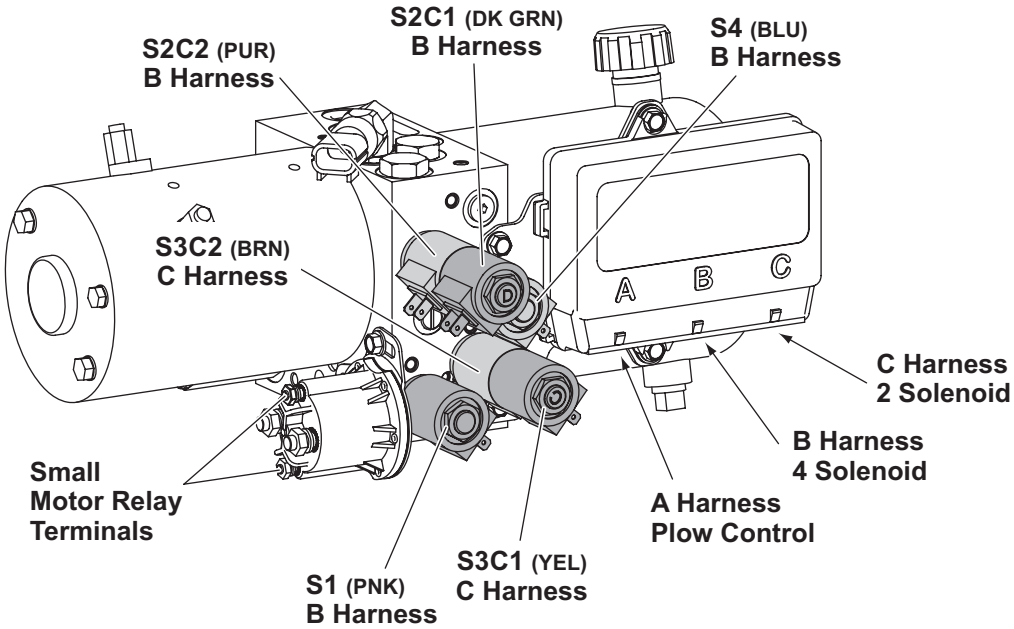

PUMP PRESSURE TEST

NOTE: The reservoir will contain residual pressure. Remove, then reinstall, the breather to release pressure before proceeding.

1. Verify proper fluid level before running the test.
2. Attach a 3000 psi hydraulic pressure gauge, elbow, and adapter to the pressure test port.
3. Activate the ANGLE function, either left or right, until the blade is fully angled.

NOTE: The control will time out after 3.5 seconds. Repeat the command if the blade is not yet fully angled.

4. Repeat the ANGLE function and read the pressure shown on the gauge.
5. Refer to the table to determine the necessary corrective action.

NOTE: See "Relief Valve Inspection and Adjustment" instructions on page 77.

BLADE MOVEMENT		ANGLE RIGHT	ANGLE LEFT
MOTOR	M	ON	ON

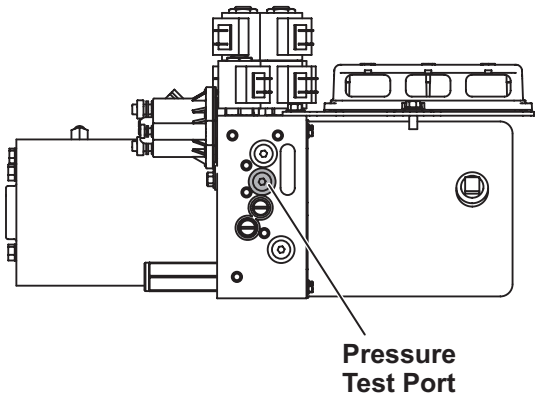

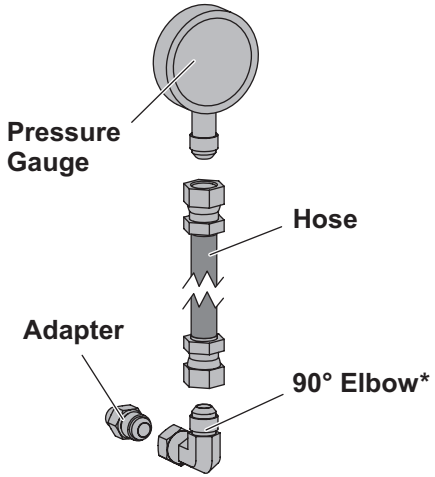

CONDITION	POSSIBLE CAUSE	CORRECTIVE ACTION
Pump pressure is below: • 1800 ± 50 psi for LT & RD blades • 2000 ± 50 psi for HD blades	Pump Relief Valve	The pump relief valve may be out of adjustment. Turn the relief valve clockwise 1/4 turn and retest the pressure. Repeat until correct pressure is obtained: 1800 psi for LT and RD blades, 2000 psi for HD blades.
		If correct pressure is not obtained after readjustment, remove and inspect the relief valve and its components. Check the O-ring, stem, and ball for wear or damage. Reseat the ball or replace the relief valve as needed. Reinstall/replace and readjust the valve, then retest pump pressure.
	O-Ring (between pump and valve block)	Remove the pump and inspect the O-ring between the pump and the valve block for wear or damage. Reinstall/replace the O-ring and pump, then retest pump pressure.
	Pump	Remove the pump and inspect it for wear or broken gears. Replace the pump if needed, adjust pump relief valve, then retest pressure.
Motor draws more than 265A at pump relief.	Motor	Replace the motor.

* Not included in 56679 Pressure Test Kit: 90° Elbow –6 F JIC 37° Swivel/–6 M JIC 37° Flare (Parker PN 6 C6X).

CARTRIDGE & CHECK VALVE REMOVAL

It is possible to remove cartridges and check valves from a hydraulic unit without draining the hydraulic fluid from the reservoir.

1. Install the Diagnostic Harness (PN 29290-2) following the instructions included with the kit.
2. Cycle through the control functions twice to remove the pressure in the hydraulic unit.
3. Slowly remove the breather from the top of the hydraulic unit.
4. **To remove cartridges or check valves without draining the reservoir,** proceed with Steps 5–8 and 10.

   To drain the reservoir before replacing components, remove the drain plug and completely drain the reservoir. Reinstall the drain plug. Replace the desired components and skip to Step 9.
5. Install a 3/8" barb fitting into the top of the reservoir tank.
6. Attach a hand-operated vacuum pump to the barb fitting.
7. Using the vacuum pump, pull a vacuum of approximately 5 to 10 Hg.
8. You should now be able to remove cartridges and check valves from the hydraulic unit with minimal fluid loss. Maintain the vacuum until the replacement cartridge/check valve has been installed. Once the replacement part has been installed, release the vacuum and remove the 3/8" barb fitting.
9. **If the reservoir was completely drained** at Step 4 above, refill the reservoir with hydraulic fluid to 1-1/2" to 2" from the top.
10. Reinstall the breather and remove the diagnostic harness according to the instructions included with the harness kit.

RELIEF VALVE INSPECTION AND ADJUSTMENT

Relief valve RV2 and components are not interchangeable with the other relief valves.

NOTE: The spring for relief valve RV2 is different from the other springs and should not be interchanged. The RV2 spring is made of a lighter wire and is gold or silver in color.

Inspection

⚠ CAUTION

Be careful to strike the valve stem squarely. You can bend the stem if you do not strike it squarely.

1. Remove the valve stem, ball, spacer, and spring.
2. Look for broken or damaged parts, contamination, or missing or damaged O-rings.
3. If all the parts are in good condition, place the ball on a hardwood block, hold the stem seat on the ball, and lightly strike the top of the stem with a hammer. This will seat the ball and valve stem.
4. Apply a light coat of anti-seize lubricant or grease to the stem threads. Lubricate the O-rings with hydraulic fluid. Reassemble the components into the valve block.

Adjustment

⚠ CAUTION

Never operate the unit while adjusting the relief valve. Doing so will damage the relief valve O-rings.

1. Screw the valve stem inward until the spring is fully compressed.
2. Back out the valve stem by turning it counterclockwise (CCW) the number of turns indicated in the table.

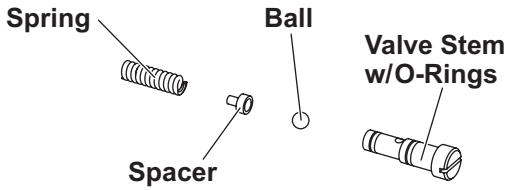

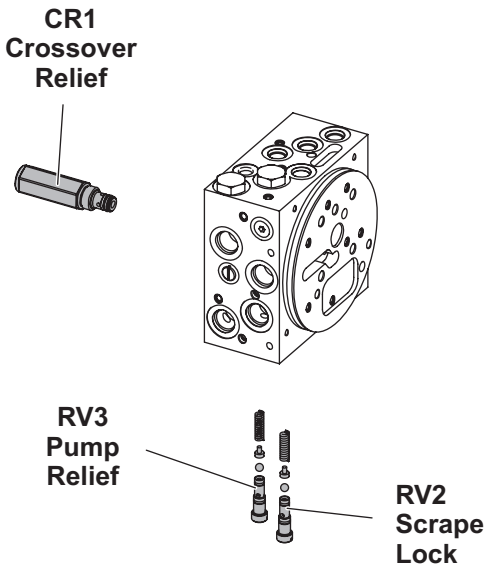

Relief Valve		Approximate Pressure	# of Turns CCW from Fully Seated
CR1	Crossover Relief (bidirectional)	4000 psi	N/A
RV2	Lift Ram Base End (Scrape Lock)	425 psi	2-1/4 – 2-1/2
RV3	Pump Relief	HD: 2000 psi LT: 1800 psi RD: 1800 psi	2000: 2 1800: 2-1/8

SCRAPE LOCK ADJUSTMENT

Follow the instructions below to adjust the pressure setting of the scrape lock feature. The snowplow must be attached to the vehicle.

1. Park the vehicle on a smooth, level, hard surface, such as concrete. Lower the blade to the ground and turn the control OFF. Turn the vehicle ignition to the "OFF" position.
2. Disconnect the snowplow battery cable from the vehicle battery cable.
3. Remove the hydraulic unit cover.
4. Loosen the breather/fill plug slowly to relieve any pressure in the reservoir.
5. Disconnect the lift ram base hose and install a 500–600 psi pressure gauge with a tee fitting into the lift ram base hose line.
6. Retighten the breather/fill plug.

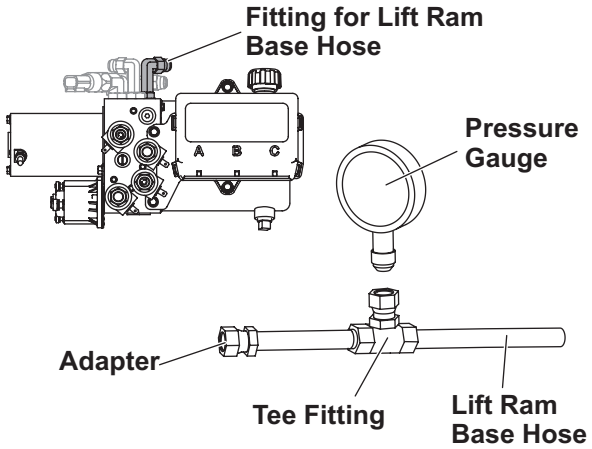

7. Reconnect the snowplow battery cable to the vehicle battery cable. Turn the vehicle ignition and snowplow control ON.
8. Raise the blade high enough to slide a floor jack under the center of the blade. Lower the blade onto the jack. Turn the control OFF to ensure that the FLOAT function is OFF.
9. While raising the blade with the jack, observe the lift cylinder. When the lift cylinder starts to retract, the pressure gauge should read 225 psi.

   The pressure can only be measured as the blade is rising. It may be necessary to perform this process more than once to obtain an accurate reading.
10. Lower the floor jack. Turn the control ON and lower the blade onto the jack.

⚠ CAUTION

Never operate the unit while adjusting the scrape lock valve. Doing so will damage the scrape lock valve O-rings.

11. If the pressure reading obtained in Step 9 was less than 225 psi, turn the scrape lock (RV2) valve stem *clockwise* 1/4 turn.

    If the pressure reading obtained in Step 9 was more than 225 psi, turn the scrape lock (RV2) valve stem *counterclockwise* 1/4 turn.

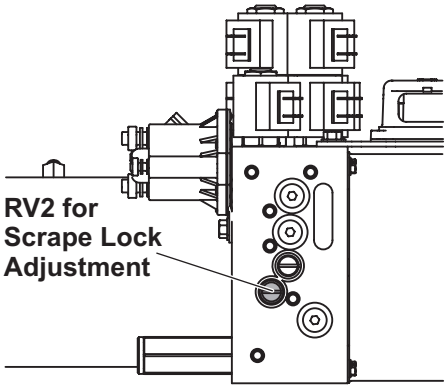

NOTE: Adjustments should be made in 1/4-turn increments.

12. Repeat Steps 9–11 until the recommended scrape lock pressure (225 psi) is achieved.

NOTE: Adjusting the scrape lock pressure in excess of the recommended pressure will increase amperage draw and will shorten the life of the plow motor.

13. Once the recommended pressure is achieved, remove the floor jack, lower the blade completely, and turn the control OFF. Turn the vehicle ignition to the "OFF" position.
14. Disconnect the snowplow battery cable from the vehicle battery cable.
15. Loosen the breather/fill plug slowly to relieve any pressure in the reservoir.
16. Remove the tee fitting and pressure gauge from the lift ram base hose. Reconnect the lift ram base hose to the manifold and tighten it securely.

⚠ CAUTION

Do not mix different kinds of hydraulic fluid. Some fluids are not compatible and may cause performance problems and product damage.

17. Check the hydraulic fluid level and add fluid if necessary.
18. Retighten the breather/fill plug and replace the hydraulic unit cover.
19. Check all blade functions.

REPLACING DAMAGED BEARING SLEEVES

Remove Damaged Bearing Sleeve

1. Remove the reservoir, pump, and motor from the hydraulic manifold.
2. Insert the bushing puller pin into the bore end of the bushing puller cup, install the washer, and hand turn the hex nut onto the pin 2 to 3 full rotations.

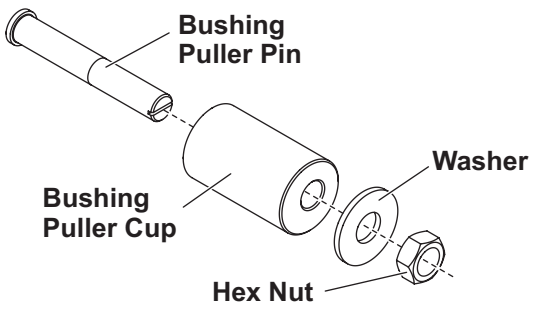

3. Insert the head of the puller pin into the bearing sleeve.

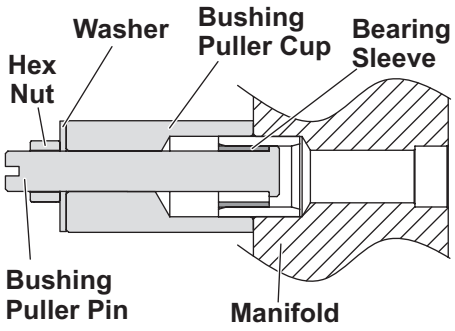

4. Turn the hex nut onto the bushing puller pin until the underside of the pin head is snug against the end of the bearing sleeve.
5. With a box wrench, slowly turn the hex nut until the bearing sleeve is removed from the aluminum bushing in the manifold. Use a flathead screwdriver in the bushing puller pin slot to keep it from rotating during the removal of the bearing sleeve.

Insert New Bearing Sleeve

1. After the damaged bearing sleeve has been removed, install the new bearing sleeve onto the bushing insertion tool as shown, and place it into the chamfer of the aluminum bushing in the manifold.
2. Install the supplied washer onto the supplied hex cap screw, and hand turn the cap screw into the bushing insertion tool from the pump side of the manifold.
3. Turn the cap screw into the insertion tool until the insertion tool contacts the aluminum bushing.

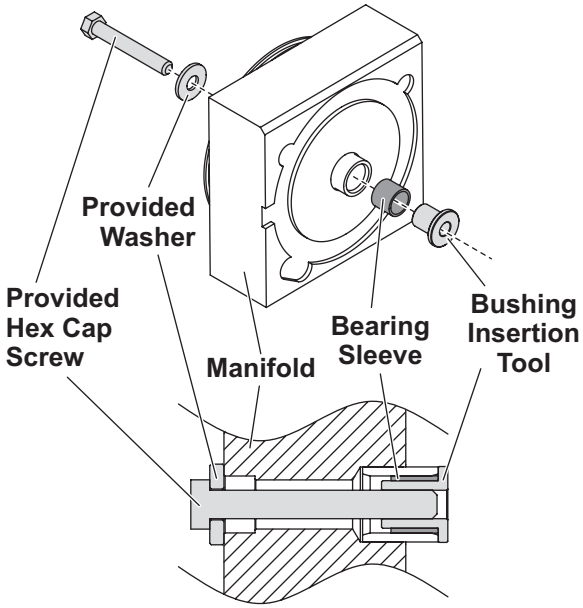

4. To remove the insertion tool, turn the cap screw 3 full turns counterclockwise, then lightly tap with a hammer. Repeat until the insertion tool is free from the bearing sleeve.

NOTE: Once the procedure has been completed, make sure that the pump shaft seal has not been damaged before reassembling the hydraulic unit.

NOTE: The bushing insertion tool sizes the inner diameter of the bearing sleeve. Store the tool in the supplied bushing to prevent damage.

Excerpts taken from Motor Bearing Sleeve Repair Kit Service Literature (Lit. No. 64595, Rev. 02).

TrynEx International, LLC
531 Ajax Drive
Madison Heights, MI 48071-2429
www.snowexproducts.com

A DIVISION OF DOUGLAS DYNAMICS, LLC

Copyright © 2020 Douglas Dynamics, LLC. All rights reserved. This material may not be reproduced or copied, in whole or in part, in any printed, mechanical, electronic, film, or other distribution and storage media, without the written consent of TrynEx International, LLC. Authorization to photocopy items for internal or personal use by TrynEx International outlets or snowplow owner is granted.

TrynEx International reserves the right under its product improvement policy to change construction or design details and furnish equipment when so altered without reference to illustrations or specifications used. TrynEx International or the vehicle manufacturer may require or recommend optional equipment for snow removal. Do not exceed vehicle ratings with a snowplow. This product is manufactured under the following US patents: 6,393,737; 6,408,549; 6,412,199; 6,442,877; 6,615,513; 7,134,227; 7,400,058; 7,430,821; 7,737,576; CAN patents 2,358,145; 2,358,354; 2,466,195; and other patents pending. TrynEx International offers a limited warranty for all snowplows and accessories. See separately printed page for this important information. The following are registered (®) or unregistered (™) trademarks of Douglas Dynamics, LLC: Automatixx®, POWER GRIP™, Scrape Maxx™, SECURITY GUARD™, SnowEx®.

Printed in U.S.A.

Lit. No. 72188, Rev. 01

September 1, 2020